AME INTL.	**Model 14140 – Instructions and Parts Breakdown** **22 Ton Air Hydraulic Service Jack**

OPERATOR'S MANUAL

Model # 14140

22TON
HIGH VERSION AIR SERVICE JACK

14140 SPECIFICATIONS

LIFTING CAPACITY	MIN. HEIGHT	MAX. HEIGHT	N.W.	G.W.	PACKAGE SIZE	AIR PRESSURE
22 Ton	8.27”	20.67”	101.41 lbs	110.23 lbs	2.6 x 1.42 x 1.1”	101.5-145 psi

OWNER/OPERATOR RESPONSIBILITY

It is the owner/operator responsibility to properly use and maintain this equipment and the legibility of all warnings and instruction labels. Carefully read and understand the instructions and warnings in this manual before operating this equipment. Keep this manual in a safe location for future reference.

⚠ WARNING ⚠

FAILURE TO READ THESE WARNINGS MAY RESULT IN PROPERTY DAMAGE AND OR PERSONAL INJURY.

-Support load by appropriate means after lifting
-Do not exceed rated capacity.
-Center load on the jack.
-Use as lifting device only.
-Use only on hard, level surface.
-Do not modify jack.
-Only use attachments and/or adapters supplied with or sold specifically for the jack.
-Only lift areas of the vehicle designated by the vehicle manufacturer.

INSPECTION

Prior to each use, visually inspect for leaking hydraulic oil, damaged, loose or missing parts. If jack is worn or damaged remove from service and contact your nearest service center for repair.

OPERATION

1. Tightly close the release valve knob (located on top of the “T” handle) by turning it clockwise.
2. Center the load on the jack saddle. Connect the air supply, and squeeze the air valve lever to raise the load. Release the air valve lever to stop movement.
3. Transfer the load to support stands.
4. To lower the jack, open the release valve knob by SLOWLY turning it counterclockwise.

NOTE: *To adjust the handle, pull up and then release the lever to lock it in one of three positions.*

Bleeding The Jack

Air bubbles can become trapped inside the bydraulic system, reducing the efficiency of the jack. Purge air from the system as needed by following these steps:

1. With the jack sitting on its base and the ram retracted, bleed air by opening the release valve.
2. Pump for 10 seconds.

Pump Prime Instructions

The air/hydraulic pump may lose its prime during shipment or after long periods without use. To prime the pump, follow these steps:

1. Remove the upper cover.
2. Loosen the hex socket bolt one-half turn. See Figure 1.
3. Close the release valve.
4. Operate the air pump while repeatedly tightening and loosening the bolt.
5. When the piston begins to rise, tighten the bolt. Verify that the piston can rise to the maximum height position.

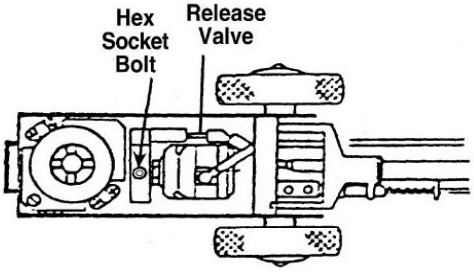

Figure 1

MAINTENANCE

Check oil level. With the jack in an upright position and the ram completely retracted, open the release valve (turn coun ter-clockwise) and remove the filler plug. The oil level should be just up to the hole. Fill if necessary with clean hydraulic jack oil.

Lubricate internal components. With the release valve open, manually pump the handle six times.

Keep the jack clean. Occasionally lubricate the handle socket pivot point, extension screw, release screw thread, and air valve to prevent corrosion.

TROUBLE SHOOTING

Problem	Cause	Solution
Erratic Action	1. Air in system 2. Viscosity of oil too high 3. Ram sticking or binding 4. Internal leakage in ram	*1. With jack sitting on its base and ram retracted, bleed air by opening release valve. Pump for 10 seconds.* *2. Change to a lower viscosity oil.* *3. Look for dirt, gummy deposits, leaks, misalignment, worn parts, or defective packing.* *4. Replace worn packings. Look for excessive contamination or wear.*
Ram does not advance	1. Release valve is open 2. Low/no oil in reservoir 3. Air locked system 4. Load is above capacity of system 5. Pump lost its prime	*1. Close release valve located on top of "T" handle.* *2. Fill with oil & bleed system.* *3. With jack sitting on its base and ram retracted, bleed air by opening release valve, running pump for 10 seconds.* *4. Use correct equipment.* *5. Follow "Pump Prime Instructions" .*
Ram only extends partially	1. Low oil level in reservoir 2. Piston rod is binding	*1. Fill reservoir with oil, & bleed system.* *2. Look for dirt, gummy deposits, leaks, misalignment, worn parts, or defective packing.*
Ram advances slowly	1. Low air pressure 2. Pump not working correctly 3. Leaking seals	*1. Adjust air pressure to 90–145 psi.* *2. Rework pump.* *3. Replace seals.*
Ram advances but doesn't hold pressure	1. Release valve is open 2. Ram seals are leaking 3. Pump check valve not working 4. Overload valve leaking or not adjusted	*1. Close release valve located on top of "T" handle.* *2. Replace seals.* *3. Clean / replace check valve.* *4. Replace / adjust overload valve.*
Jack leaks oil	1. Worn or damaged seals	*1. Replace seals.*
Ram will not retract, or retracts slowly	1. Release valve is closed 2. Reservoir too full 3. Ram damaged internally	*1. Open release valve.* *2. Drain oil to correct level.* *3. Take jack to authorized service center for repair.*

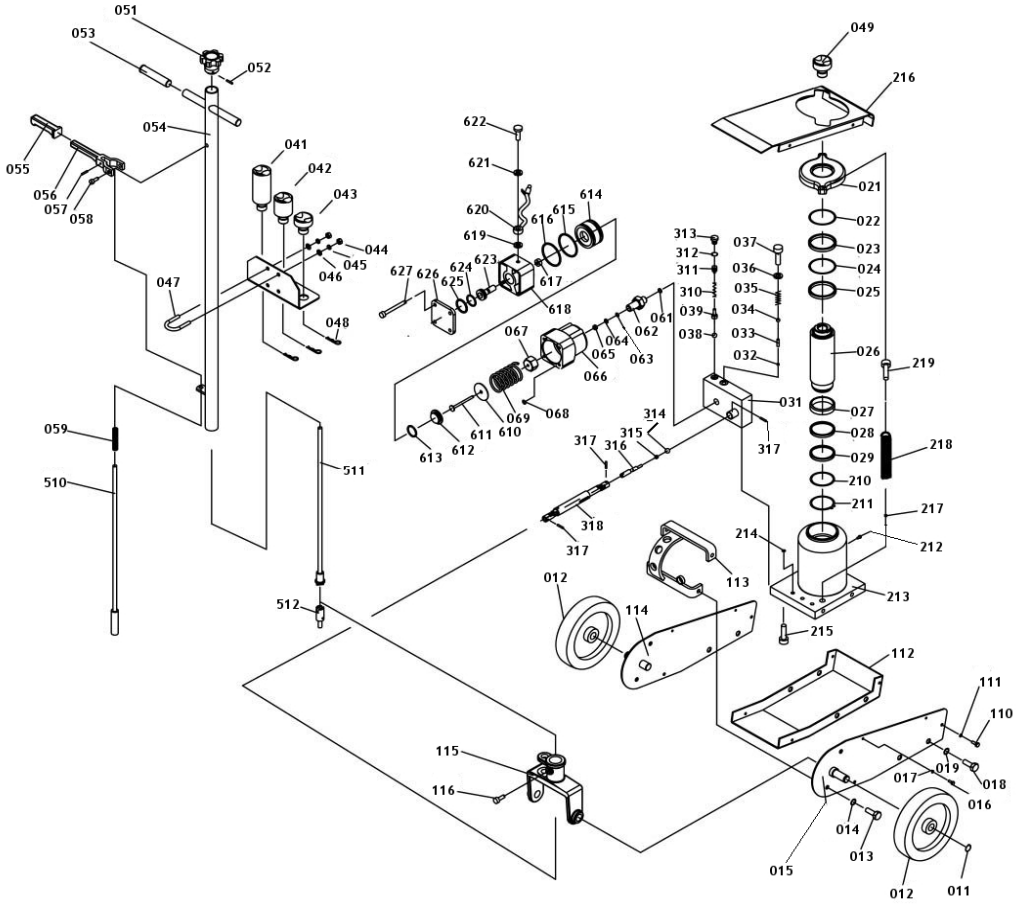

Part No.	Description	Qty.	Part No.	Description	Qty.
14140-011	Snap Ring	2	14140-317	Rivet	8
14140-012	Wheel	2	14140-318	Universal Joint Assembly	1
14140-013	Bolt	1	14140-041	100mm Extension Adapter	1
14140-014	Washer	4	14140-042	60mm Extension Adapter	1
14140-015	Frame Right	1	14140-043	20mm Extension Adapter	1
14140-016	Bolt	4	14140-044	Nut	2
14140-017	Washer	4	14140-045	Spring Washer	2
14140-018	Bolt	4	14140-046	Flat Washer	2
14140-019	Washer	4	14140-047	U-Bolt	1
14140-110	Bolt	4	14140-048	Hairpin Clip	3
14140-111	Washer	4	14140-049	20mm Extension Adapter	1
14140-112	Bed	1	14140-051	Knob	1
14140-113	Bracket	1	14140-052	Pin	1
14140-114	Frame left	1	14140-053	Handle Sleeve	2
14140-115	Handle Socket	1	14140-054	Handle Assembly	1
14140-116	Bolt	1	14140-055	Sleeve	1
14140-021	Spring Hanger	1	14140-056	Lock Lever	1
14140-022	Snap Ring	1	14140-057	Pin	1
14140-023	Bushing	1	14140-058	Bolt	2
14140-024	O-Ring	1	14140-059	Spring	1
14140-025	Bushing	1	14140-510	Control Rod	1
14140-026	Piston Rod	1	14140-511	Convey Rod	1
14140-027	Riston Ring	1	14140-512	Rod Joint	1
14140-028	Washer	1	14140-061	Copper Washer	1
14140-029	O-Ring	1	14140-062	Cylinder Pump	1
14140-210	Washer	1	14140-063	Y-Sealing Washer	1
14140-211	Snap Ring	1	14140-064	Nylon Washer	1
14140-212	Oil Filler Plug	1	14140-065	Copper Washer	1
14140-213	Oil Cylinder Assembly	1	14140-066	Air Motor Housing A	1
14140-214	O-Ring	3	14140-067	Hex Nut	1
14140-215	Bolt	3	14140-068	O-Ring	4
14140-216	Cover Board	1	14140-069	Spring	1
14140-217	Nut	2	14140-610	Washer	1
14140-218	Spring	2	14140-611	Pump Plunger	1
14140-219	Bolt	2	14140-612	Washer	1
14140-031	Valve Block	1	14140-613	O-Ring	1
14140-032	Steel Ball	1	14140-614	Piston	1
14140-033	Pin	1	14140-615	O-Ring	1
14140-034	Steel Ball	1	14140-616	O-Ring	1
14140-035	Spring	1	14140-617	Copper Washer	1
14140-036	Copper Washer	1	14140-618	Air Motor Housing B	1
14140-037	Bolt	1	14140-619	Copper Joint Ring	1
14140-038	Steel Ball	1	14140-620	Air Hose w/Air Valve	1
14140-039	Ball Seat	1	14140-621	Washer	1
14140-310	Spring	1	14140-622	Bolt	1
14140-311	Screw	1	14140-623	Release Air Rod	1
14140-312	Sealing Washer	1	14140-624	O-Ring	1
14140-313	Valve Plug Screw	1	14140-625	O-Ring	1
14140-314	Steel Ball	1	14140-626	Cylinder Cover	1
14140-315	Sealing Washer	1	14140-627	Bolt	1
14140-316	Release Valve Rod	1			