5040/5050/5060/5065 AX/EX Rim Clamp® Tire Changer

For servicing single piece automotive and most light truck tire/wheel assemblies

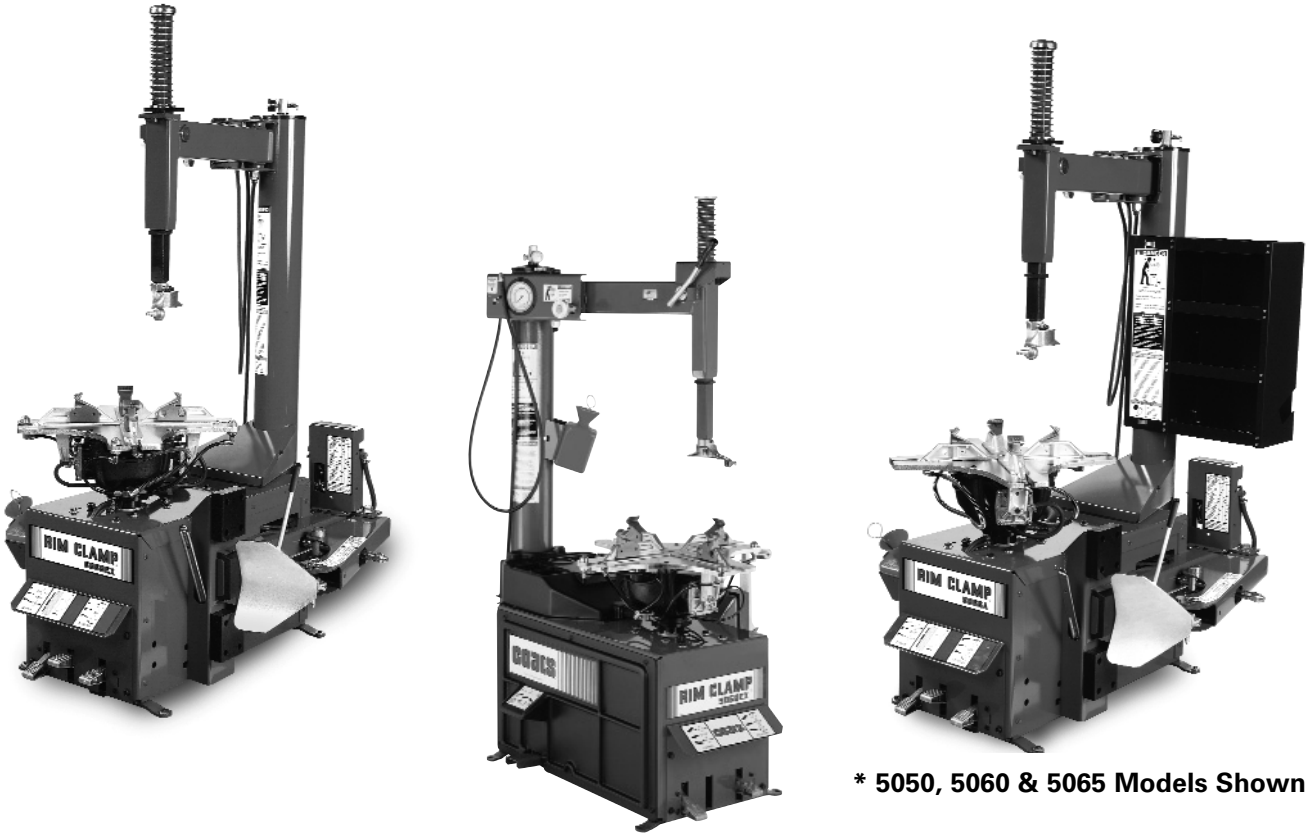

*** 5050, 5060 & 5065 Models Shown**

Parts Identification

READ these instructions before placing unit in service KEEP these and other materials delivered with the unit in a binder near the machine for ease of reference by supervisors and operators.

HENNESSY INDUSTRIES, INC.

1601 J. P. Hennessy Drive, LaVergne, TN USA 37086-3565 615/641-7533 800/688-6359 www.ammcoats.com

HENNESSY INDUSTRIES INC. Manufacturer of AMMCO®, COATS® and BADA® Automotive Service Equipment and Tools.

Manual Part No.: 8182882 30

Revision: 06/09

Parts Identification

The following pages include parts breakdowns with exploded view illustrations to help with ordering replacement or spare kits. Assemblies are noted where it is recommended that individual parts not be ordered separately. Note that the parts view illustrations are for multiple models and not all parts shown are on all models. Every effort is made to supply accurate exploded views, however, due to interim changes in manufacturing operations, some units may not be exactly as illustrated.

Table of Contents

Chassis System . . . . . .4 - 5

BL Arm Assembly . . . . . .6 - 7

Table Top and Shaft Housing Assembly . . . . . .8 - 9

Foot Pedal Assembly . . . . . .10 - 13

Electric Model Foot Pedal Assembly . . .10 - 11

Air Model Foot Pedal Assembly . . . . . .12 - 13

Oil Injector Diagram (if equipped) 14

Swing Arm Assembly 15

Inflation Bracket and Tower Assembly . . . . . .16 - 17

Pnuematic Diagrams . . . . . .18 - 21

Electric Schematic 22

Chassis System

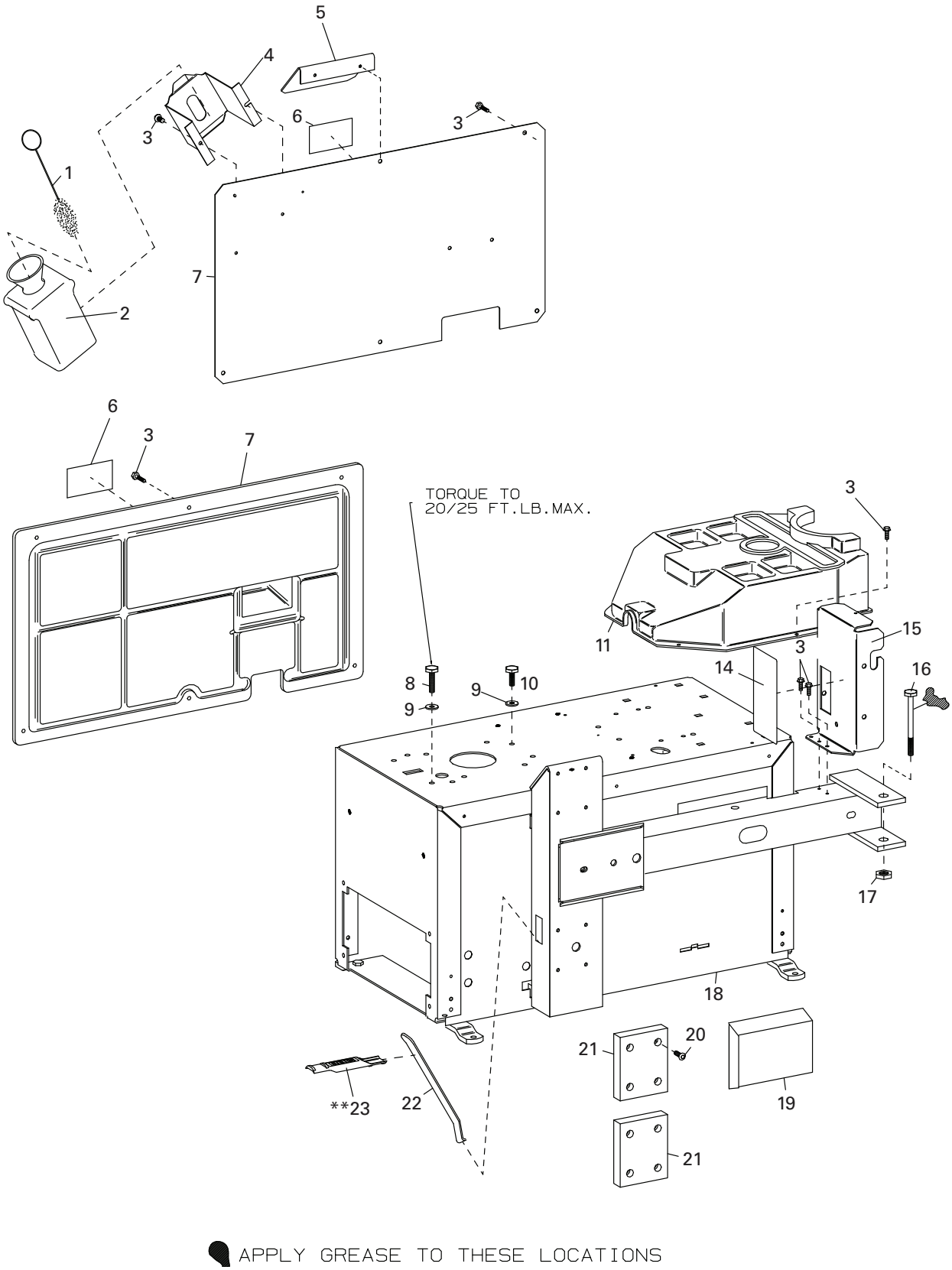

(Chassis System)

ITEM	PART NO.	DESCRIPTION
1	8000491	Lube Applicator
2	8106259	Lube Bottle - Red
	8182876	Lube Bottle - Black (5060)
3	8106301	1/4" Hex Hd Self Tap Screw, Gr.5
4	8182809	Lube Bottle Brkt - Red
5	8182811	Cover-Infl. Pedal - Red
6	8181285	Inflation Pedal Decal (5060)
7	8182807	Side Panel - Metal
	8182477	Side Panel - Plastic (5060)
8	8182040	10MM x 55MM Hex Hd.Cap Scr, Gr.5
9	8301032	3/8 Flat Washer, Zinc Plate
10	8107715	3/8-16 x 1-1/4 Hex Hd. Cap Scr, Gr.8.8
11	8181964	Plastic Accessory Tray (5060)
14	8183778	Lubrication Notice Decal
15	8183770	Filter/Lube Bracket
16	8182579	3/4-10 x 5 Hex Hd. Cap Scr, Gr.5
17	8182016	3/4"-10 Nylon Insert Lock Nut, Gr.5
18	8182041	Chassis
19	8181855	B.L. Center Pad
20	8182088	5/16 x 1 Torx Screw, Gr.5
21	8181851	B.L. Pad, Front
22	8181354	Bead Lifting Tool
23	**85000783	Bootie Kit, Lift Tool, Pkg of 10

**Indicates Accessory Item

BL Arm Assembly

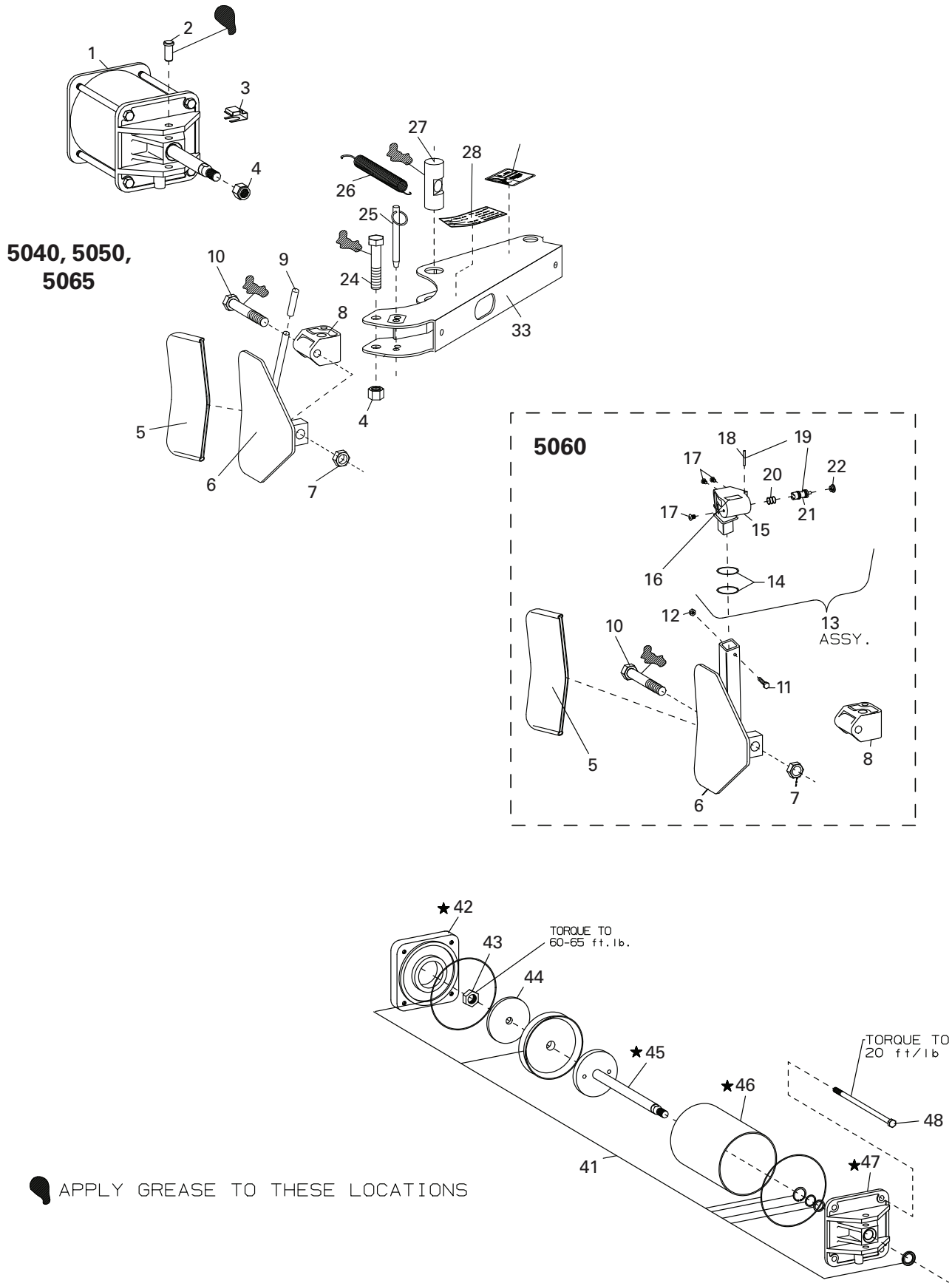

★ THESE PARTS NOT AVAILABLE FOR SERVICE.

(BL Arm Assembly)

ITEM	PART NO.	DESCRIPTION
1	8183312	B.L. Cylinder Assembly w/BL Valve (5040, 5050, 5060)
	8182014	B.L. Cylinder Assembly (5065)
2	8181949	Clevis Pin-5/8 x 1-3/8
3	8181912	Clip, Clevis
4	8182016	3/4"-10 Nylon Insert Lock Nut, Gr.5
5	8183606	Bootie Kit, Shoe, Pkg of 2
6	8183529	B.L. Shoe, Handle & Pivot W/C (5040, 5050)
	8181953	B.L. Shoe, Handle & Pivot W/C (5060, 5065)
7	8182043	5/8-11 Nylon Insert Lock Nut Gr.5
8	8181951	B.L. Shoe Pivot Bracket
9	7000230	Rubber Hand Grip, 1/2 (5040, 5050, 5065)
10	8182011	5/8-11 x 5" Hex Hd Cap Scr, Gr.5
11	8182013	#10-24 x 1-1/2" Gr.5 HHCS (5060)
12	8181862	10-24 Nylon Insert Lock Nut Gr.5 (5060)
13	8182352	B.L. Handle/Valve Assembly (5060)
14	8182321	ø2 x 1/4" Roll Pin O-ring (5060)
15	8182987	B.L. Handle Housing (5060)
16	8181971	Decal - B.L. Handle (5060)
17	8182364	#10-32 x 1/4 Gr.5 BHSCS (5060)
18	8182319	ø3/32 x 1-1/4" Roll Pin (5060)
19	8182725	Valve & Roll Pin Kit (5060)
20	8182318	Handle Spring-B.L. (5060)
21	8182317	3-Way Miniature Valve (5060)
22	8182047	Manual Push Button (5060)
24	8182009	3/4-10 x 3 3/4" HHCS (5040, 5050, 5065)
25	8120326	Hitch Pin, ø1/2"
26	8180230	B.L. Spring
27	8182550	Pivot Pin, B.L. Cylinder Rod
28	8181970	Bead Loosener Caution Decal
29	8182768	Bead Loosener Caution Decal
33	8182002	B.L. Arm (5040, 5050, 5060)
	8182816	B.L. Arm (5065)
41	8182079	Seal Kit, B.L. Cylinder
42	8183310	B.L. Cylinder Bottom Cap (5040, 5050, 5060)
	8181570	B.L. Cylinder Bottom Cap (5065)
43	8182016	3/4" NC Locknut Gr. 5 (5040, 5050, 5060)
	8100957	3/4" NC Locknut Gr. 5 (5065)
44	8181860	B.L. Cylinder Lower Washer
45	8183519	Shaft/Washer Assembly (5040, 5050, 5060)
	8182061	Shaft/Washer Assembly (5065)
46	8181574	B.L. Cylinder Barrel
47	8183309	B.L. Cylinder Top Cap
48	8181862	Tie Bolt, 1/2-13 x 10-1/4" Lg., Gr.5

Table Top and Shaft Housing Assembly

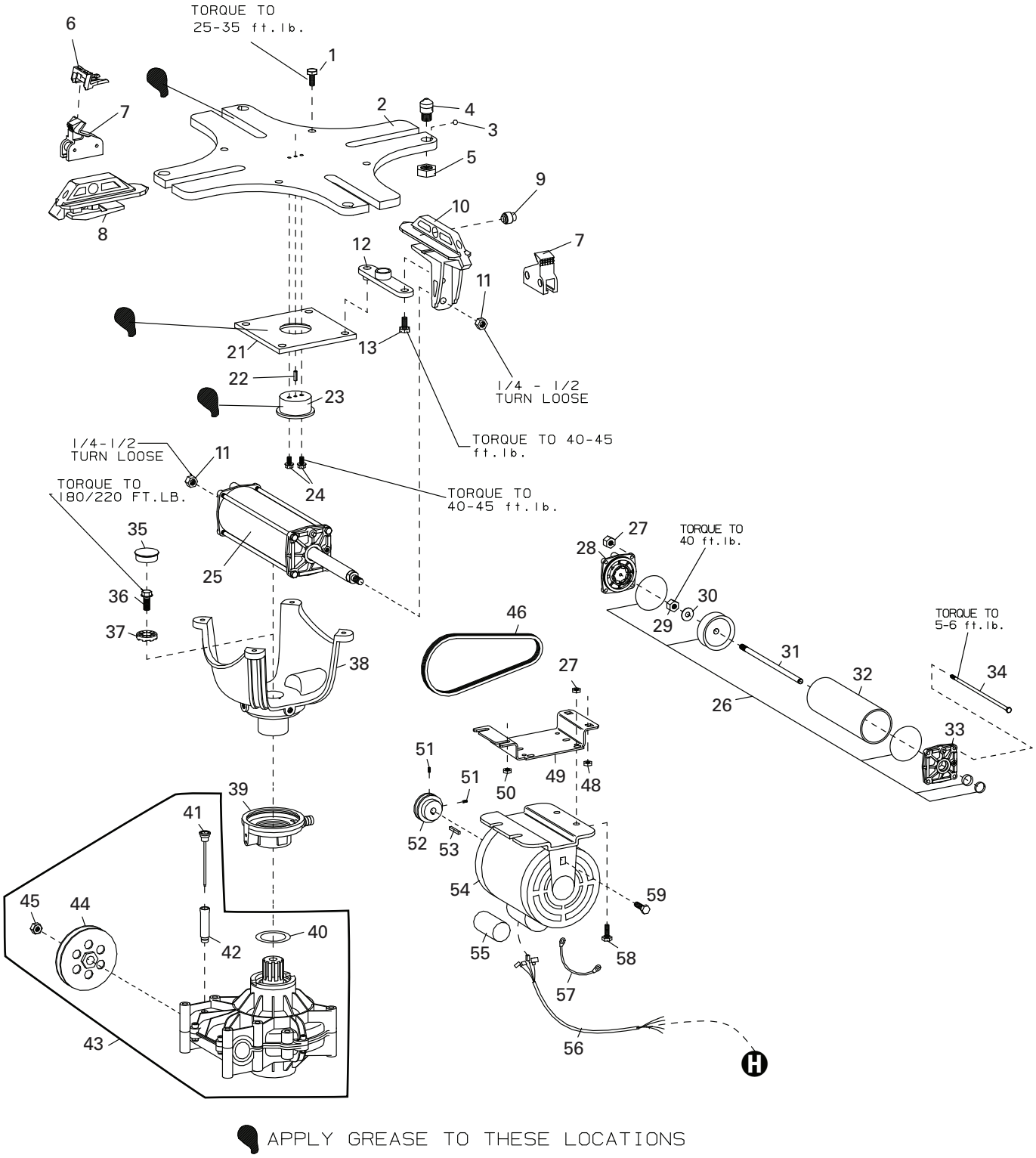

(Table Top and Shaft Housing Assembly)

ITEM	PART NO.	DESCRIPTION
1	8181929	Skt. Hd. Cap Scr., 3/8-16 x 1", Gr.8
2	8181704	Table Top Plate (5050, 5060, 5065)
	8182952	Table Top Plate w/o Jets (5040, 5060)
3	8182024	1/4" Steel Ball (5060, 5065)
4	8182025	Inflation Nozzle (5060, 5065)
5	8182083	3/4" Jam Nut
6	8183604	Bootie Kit, Rim Clamp, Pkg of 10
7	8184126EX	Adjustable Rim Clamp
	8181677	Fixed Position Clamp (5060A CSA)
	8182247	Adjustable Rim Clamp (5040)
8	8182249	Carrier/Cover - Clamp Adj. (5050, 5060, 5065)
	8184925	Adjustable Rim Clamp (5040)
9	8182250	Adj. Clamp Plunger/Spring Assy.
10	8182248	Carrier/Cover - Cylinder End (5050, 5060, 5065)
	8184924	Carrier/Cover - Cylinder End (5040)
11	8101039	Nut - Lock, 1/2", Gr.5
12	8181734	Pivot Link W/C
13	8181904	Table Top Clamp Link Bolt (5050, 5060, 5065)
	8182279	Adj. Clamp Link Bolt (5040)
21	8181731	Pivot Plate - Table Top
22	8183476	Roll Pin - ø1/4" x 3/4"
23	8181733	Pivot Block
24	8183452	Flange Whiz-lock Scr., 5/16-18 x 5/8"
25	8182613	Cylinder Assembly-Table Top
26	8183772	Seal Kit, T.T. Cylinder
27	8181183	5/16-18 Nylon Insert Lock Nut Gr.5
28	8181622	Cylinder Bottom Cap
29	8182719	1/2-13 Locking Jam Nut, Gr.5
30	8183771	Washer, Piston
31	8181629	Shaft, Tabletop Cyl.
32	8181627	Sleeve, Cylinder
33	8181620	Cylinder Top Cap
34	8181633	Tie Bolt, Tabletop Cylinder
35	8182627	Cap Plug - 1-5/8" Dia.
36	8181742	16MM x 40mm Hex Head Bolt Gr.10.9
37	8182979	Washer - Molded, ø16mm
38	8181990	Spider Assembly
39	8182619	Rotary Coupling Assembly
40	8183156	Washer - ø2" X ø2 3/4" x .010
41	8182186	Dipstick-Transmission
42	8182185	Tube-Dipstick
43	8185654	Kit-Transmission
44	8181658	Pulley-Transmission
45	8182162	Nut - Hex, 12MM, Gr.8.8
46	8180047	V-Belt, Motor
48	8143044	Tinnerman Sq. Captive Nut 3/8-16
49	8181931	Bracket, Motor Mounting
50	8106303	3/8" Whiz Lock Nut, Gr.5
51	8180217	5/16-18 x 3/8" Soc.Hd.Set Screw, Gr.5
52	8184674	Pulley-Motor
53	8180558	Key-Motor
54	8184691	Motor, Electric 115V (5060)
	8182621	Motor, Electric 220V, 50Hz, 1ø (5060)
	8181100	Motor, Electric 115V (5040, 5050, 5065)
	85000591	Motor, Electric 220V (5040, 5065)
55	8180638	Motor Capacitor Only, 400-480 µFD
	85000632	Motor Cable Assembly, 220V (5065)
56	8181511	Motor Cable Assembly, 4-wire, 220V
	8184562	Motor Cable Assembly (5040)
57	8180560	Ground Jumper
58	8120325	5/16-18 x 1 Ser. Wash.Hd.Scr., Gr.5
59	8120455	10-24 Self Tap Screw, Gr.2

Foot Pedal Assembly

Electric Model Foot Pedal Assembly

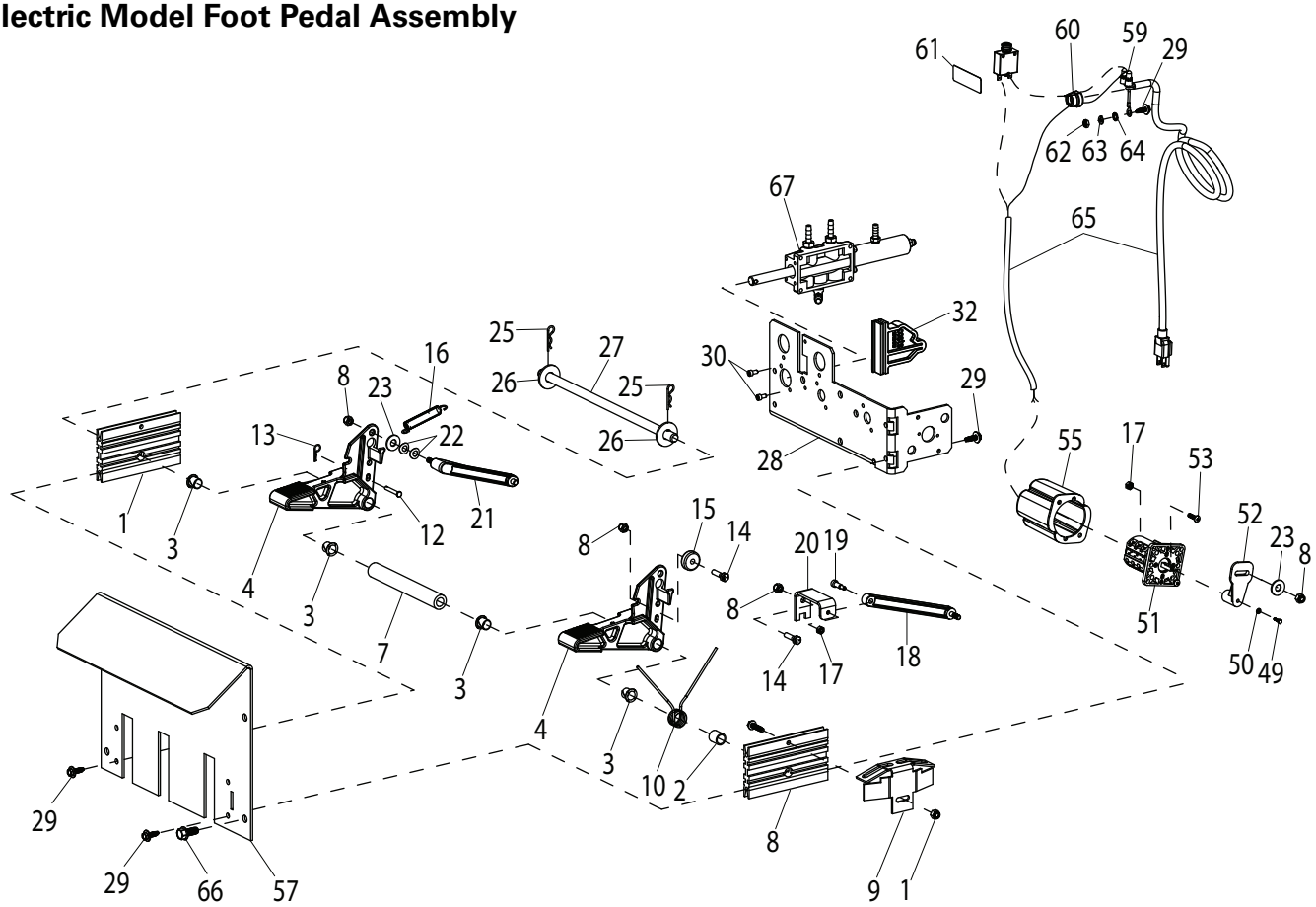

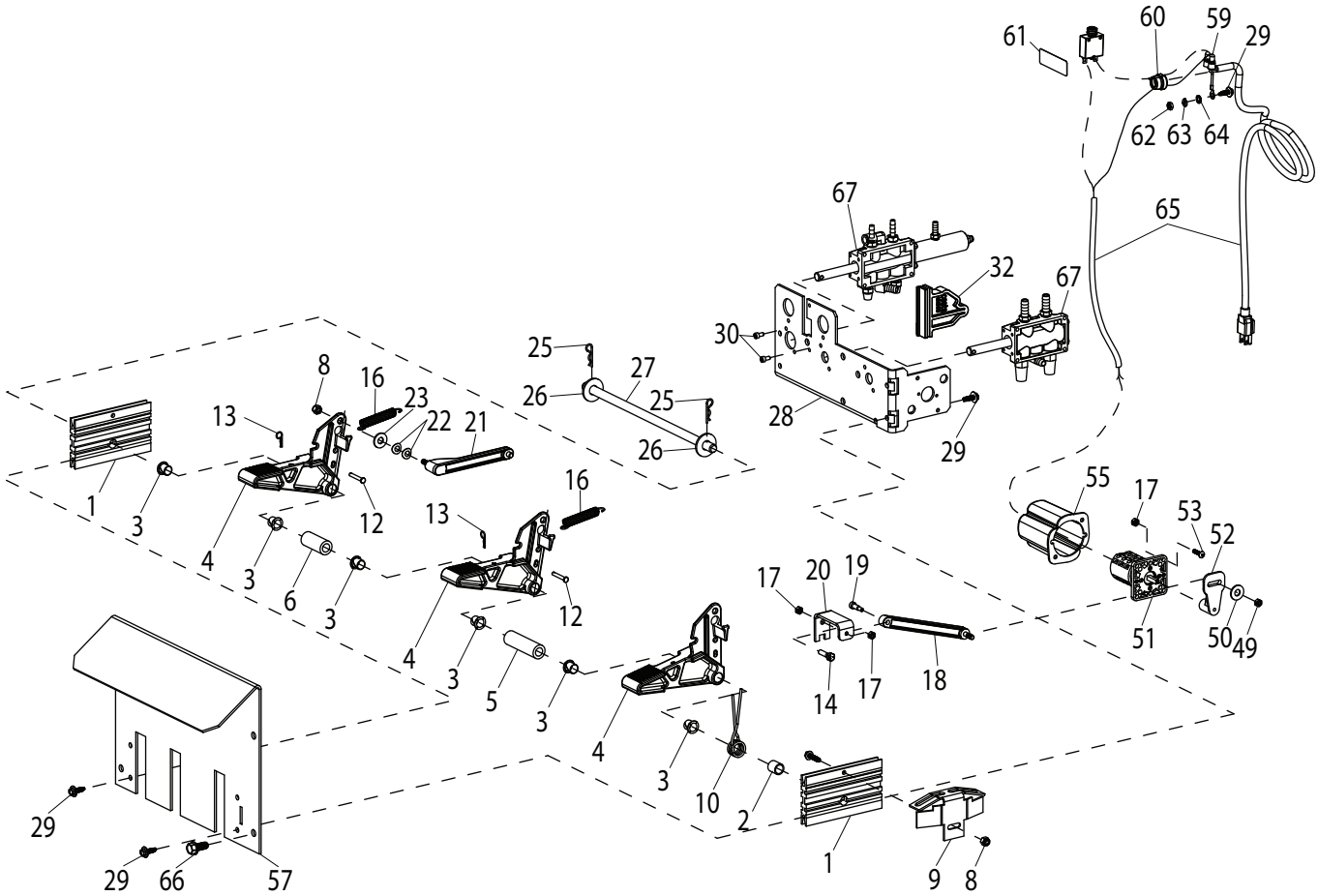

ITEM	PART NO.	DESCRIPTION
1	8181918	Bar-Valve Brkt. Spacer
2	8181872	Sleeve-Torsion Spring
3	8181948	Bearing-Nyliner, 1/2"
4	8181675	Pedal, Standard
5	8182327	Pedal Spacer
6	8181911	Spacer-Pedal
7	8182358	Spacer-Pedal
8	8181369	Nut - Lock, Nyl. Ins., 1/4-20, Gr.5
9	8182670	Spring Stop Bracket
10	8181707	Torsion Spring
12	8181977	Clevis Pin 3/16" x 1-1/2"
13	8120469	Hair Pin Cotter
14	8181984	Hx.Hd.Cp.Scr., 1/4-20 x 1", Gr.5
15	8181923	Washer - Stop
16	8181708	Extention Spring, Pedal
17	8182682	10-24 Nylon Insert Lock Nut Gr.5
18	8181699	Lever Assembly - Switch
19	8182743	10-24 x 3/8 SHCSS Gr.8
20	8182363	Spacer - Sw Pedal Lever-Red
21	8181696	Lever-Cam Follower
22	8181981	Wave Washer, 5/16" I.D.
23	8107635	5/16" Flat Washer
25	8111609	Cotter, Hair Pin
26	8301121	Washer
27	8183398	Pedal Shaft
28	8183031	Bracket-Valve Mounting
29	8106301	1/4" Hex Hd Self Tap Screw, Gr.5

ITEM	PART NO.	DESCRIPTION
30	8181989	10-24 x 3/8 SHCS, Gr.8
32	8181695	Cam-Mounting Block
49	8181982	3MM x 12mm HHCS Gr.5
50	8301072	#6 Internal Tooth Lk Washer
51	8184389	Switch-Reversing (switch only)
52	8181728	Lever - Switch Actuator
53	8181983	BHSCS 10-24 x 5/8, Gr.8
55	8181959	Cover-Switch
57	8182332	Guard-Foot Pedal
59	8143254	Wire Joint
60	906077	Strain Relief
61	8180237	Caution Decal
62	8107440	14-20 Hex Nut Gr.5
63	8301142	Washer, 1/4" Spring Lock
64	8150441	1/4" Star Lock Washer
65	8181603	Power Cable Assy (5040)
	8184961	Power Cable Assy, 220V (5040)
	8181956	Pwr Cable Assy, 115V, w/o breaker (5050, 5060, 5065)
65	8182257	Pwr Cable Assy 115V w/breaker
	8182712	Pwr Cable Assy 220V, 50Hz, 1ø (5060)
	85000653	Pwr Cable Assy 220V w/o breaker (5065)
66	8102459	3/8" Self Tap Screw Gr.5
67	8181986	Valve, 4-Way w/Pull Pin
*70	8181587	Circuit Breaker (5060 - C.S.A.)

*Not Shown

Air Model Foot Pedal Assembly

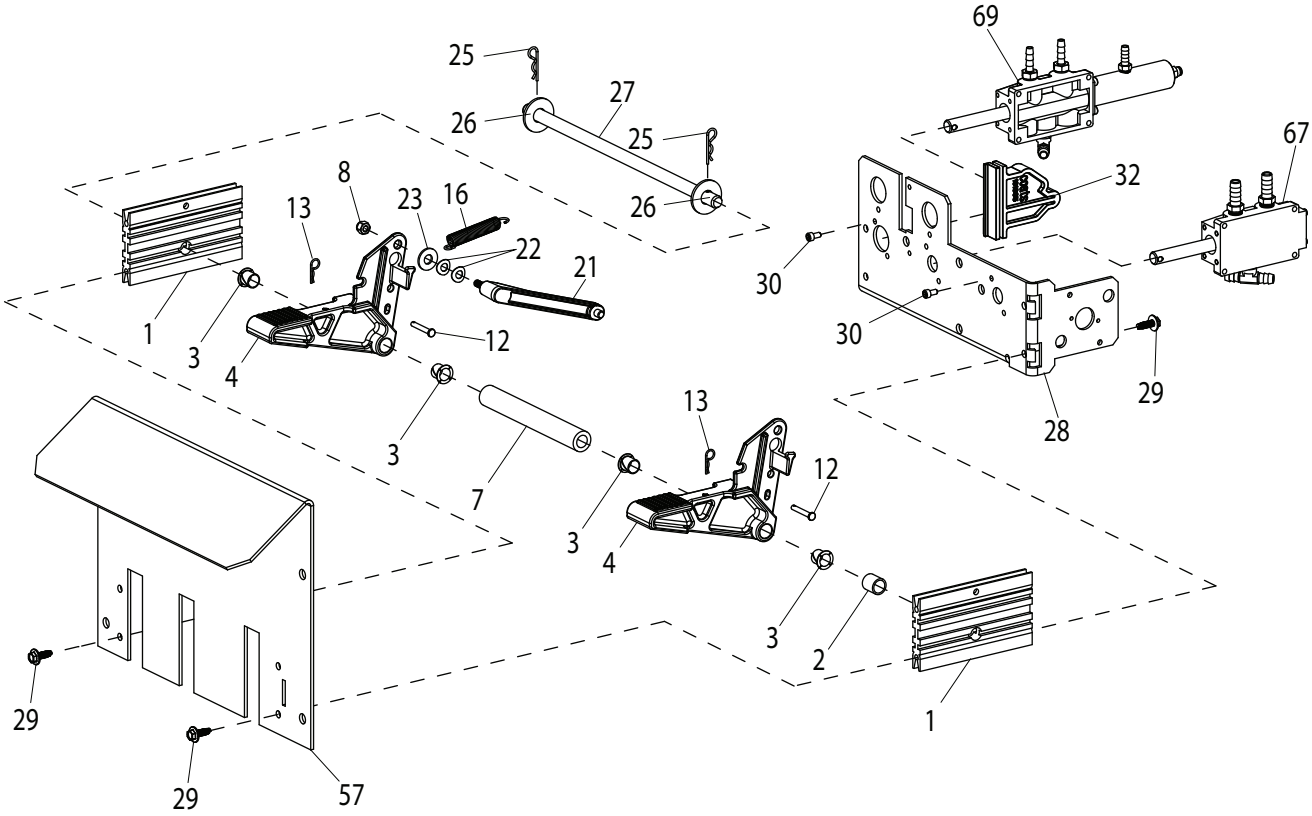

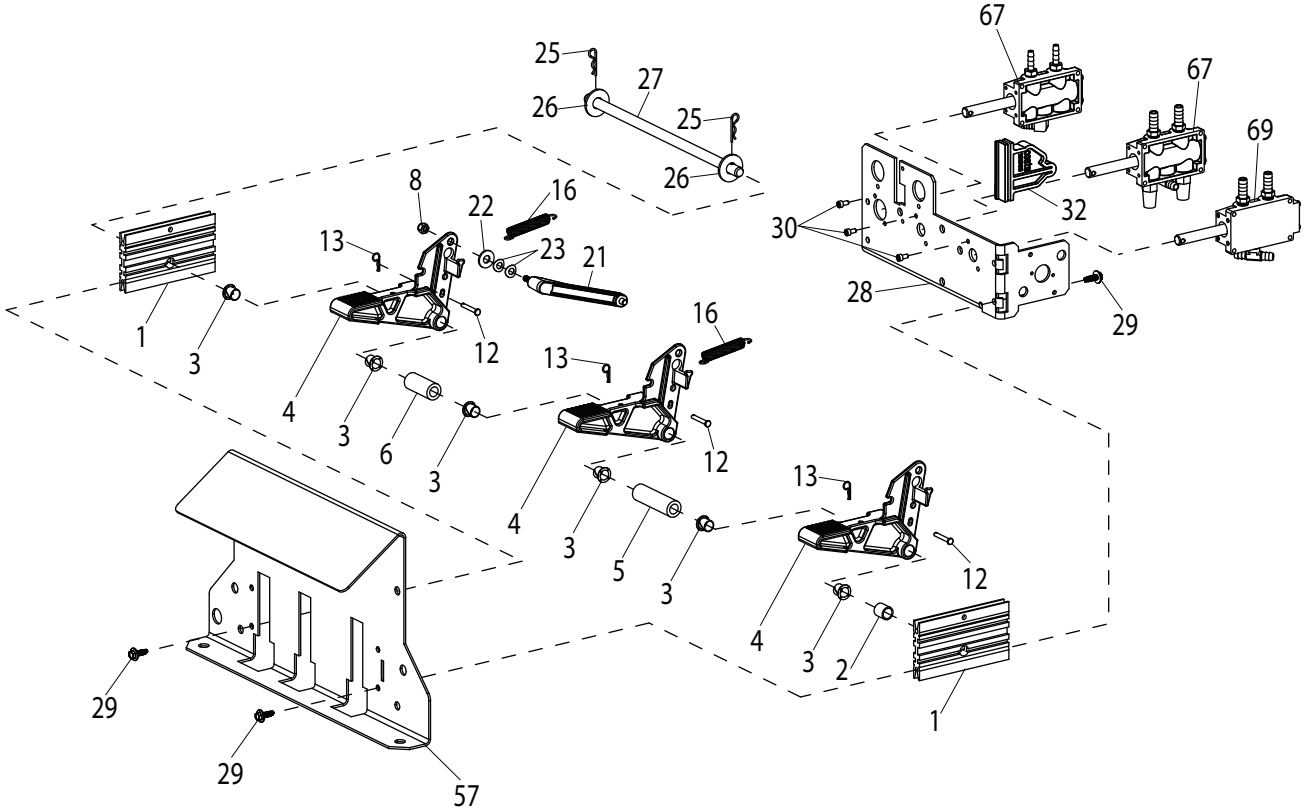

ITEM	PART NO.	DESCRIPTION
1	8181918	Bar-Valve Brkt. Spacer
2	8181872	Sleeve-Torsion Spring
3	8181948	Bearing-Nyliner, 1/2"
4	8181675	Pedal, Standard
5	8182327	Pedal Spacer
6	8181911	Spacer-Pedal
7	8182358	Spacer-Pedal
8	8181369	Nut - Lock, Nyl. Ins., 1/4-20, Gr.5
12	8181977	Clevis Pin 3/16" x 1-1/2"
13	8120469	Hair Pin Cotter
16	8181708	Extention Spring, Pedal
21	8181696	Lever-Cam Follower
22	8181981	Wave Washer, 5/16" I.D.
23	8107635	5/16" Flat Washer

ITEM	PART NO.	DESCRIPTION
25	8111609	Cotter, Hair Pin
26	8301121	Washer
27	8183398	Pedal Shaft
28	8183031	Bracket-Valve Mounting
29	8106301	1/4" Hex Hd Self Tap Screw, Gr.5
30	8181989	10-24 x 3/8 SHCS, Gr.8
32	8181695	Cam-Mounting Block
57	8182332	Guard-Foot Pedal
67	8181986	Valve, 4-Way w/Pull Pin
69	8181986	Valve, 4-Way w/Pull Pin (5050, 5065)
	8184369	Valve, 4-Way w/Pull Pin (5040, 5060)

*Not Shown

Oil Injector Diagram (If equipped)

ITEM	PART NO.	DESCRIPTION
1	8185629	Tank Reservoir
2	8183452	5/16-18 Flange Screw
3	924724	5/16-18 Flange Hex Nut
4	8184243	1/4" x 49" Red Rubber Hose
6	8000643	1/4" NPT Tee
7	8109481	1/8" x 1/4" NPT Reducer

ITEM	PART NO.	DESCRIPTION
8	8181996	1/8" Tube x 1/8" Flange Screw
9	8101898	St. 1/4" NPT 3/8" Hose Fitting
10	85000840	1/8" x 10 Blk Nylon Tube
12	8101428	1/4-5/8 Hose Clamp
13	8184686	Spacer Plug
14	8184675	Oil Injector

Note: Hose clamps not shown in diagram

Note: Fittings have a sealant coating as purchased. If absent, be sure to apply teflon tape or thread sealant at installation.

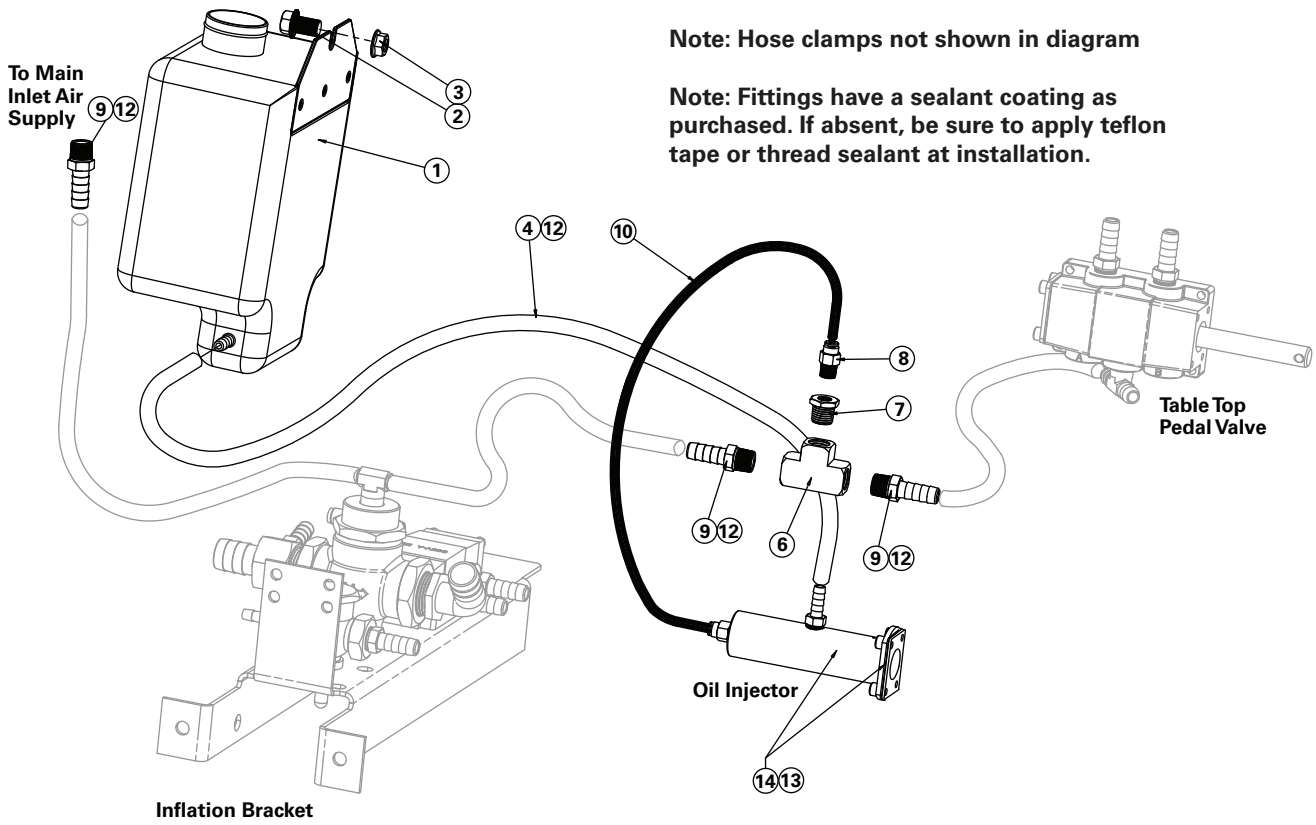

Swing Arm Assembly

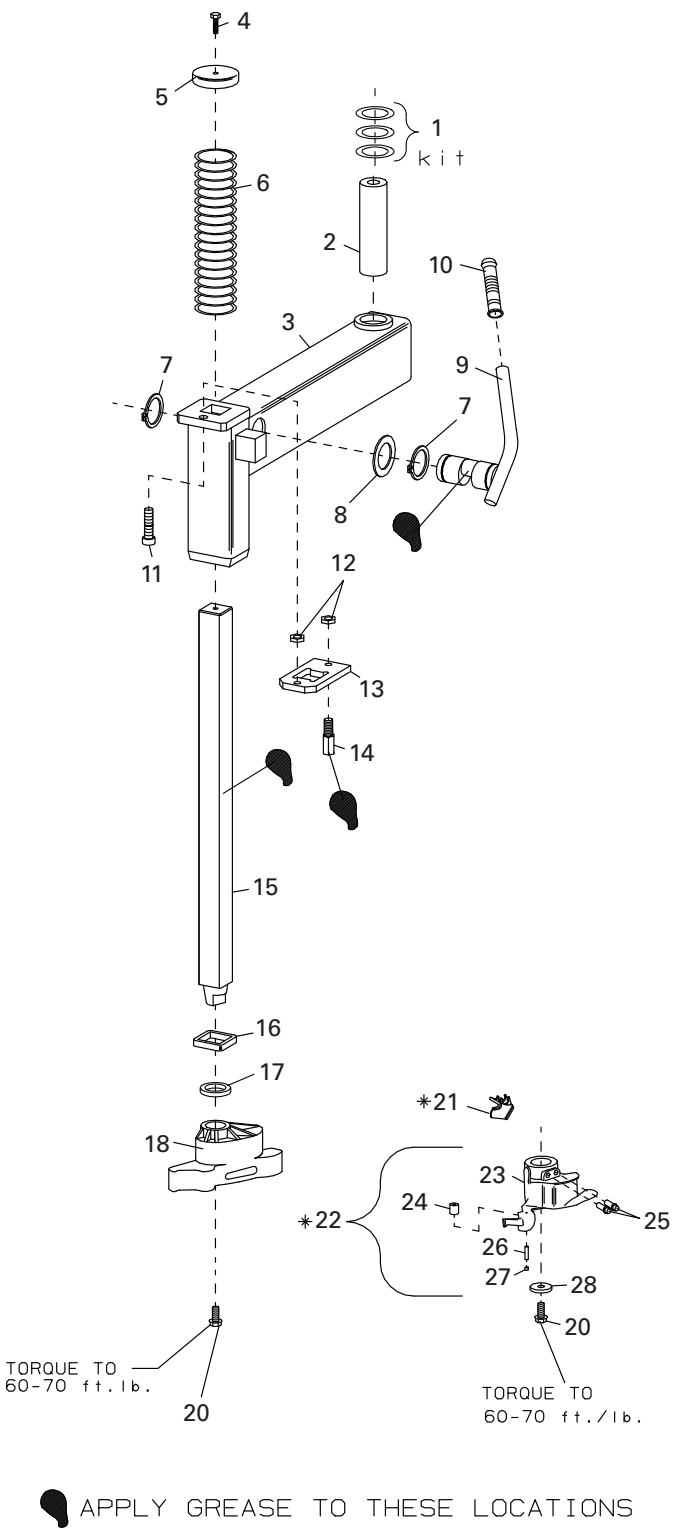

ITEM	PART NO.	DESCRIPTION
1	8182339	Shim Kit - Swing Arm
2	8181038	Pivot Pin-Swing Arm
3	8182820	Swing Arm (5050, 5065)
	8182312	Swing Arm (5060)
	8184830	Swing Arm (5040)
4	8182029	5/16-1 x 1-1/2 BHSCS, Gr.8
5	8181771	Knob - Vertical Slide
6	8182028	Spring-Vertical Slide
7	8181095	1-5/8 Snap Ring
8	8182371	Wave Washer, 1-5/8 Dia.
9	8181082	Lock Handle/Lift Cam W/C
10	8100979	Handle Grip, Black Flex 3/4 I.D.
11	85606344	1/2 x 5/8 Shoulder Screw
12	85606343	1/2"-13 Jam Nut, Gr. 5
13	8181788	Lock Plate
14	8181035	Lift Pin-Lock Plate
15	8182812	Shaft-Vertical Slide (5050, 5060, 5065)
	8181769	Shaft-Vertical Slide (5060, Non-tapered)
	8182767	Shaft-Vertical Slide (5040)
16	8182031	Rubber Bumper
17	8183033	Washer (7050)
18	8183061	Mount/Demount Head, Plastic (5060)
20	8106302	3/8" Whiz Lock Screw, Gr.5
21	8182770	Bootie-Mount/Demount Head-Single
	8182961	Mount/Demount Head Bootie-Pkg of 2
	8182963	Mount/Demount Head Bootie-Pk of 12
22	8182788	Mount/Desmount Head Assembly
23	8182026	Mount Demount Head Assembly (5060)
24	8181916	Roller 0.562 Diameter x 0.515 LG. (5060)
	8182787	Roller 0.562 Diameter x 0.515 LG. (5040, 5050, 5065)
25	8182004	3/8-16 x 3/4" Ctr Bore Cap Scr, Gr.8
26	8182786	5MM x 25MM Dowel Pin (5040, 5050)
	8181915	5MM x 20MM Dowel Pin (5060)
27	8140667	1/4-20 x 1/4 Soc.Hd.Set Scr, Gr.8 (5040, 5050, 5065)
	8181914	1/4-20 x 3/16 Soc.Hd.Set Scr, Gr.5
28	8182027	Washer 7 ga. x .406 ID x 1.28 OD

Inflation Bracket and Tower Assembly

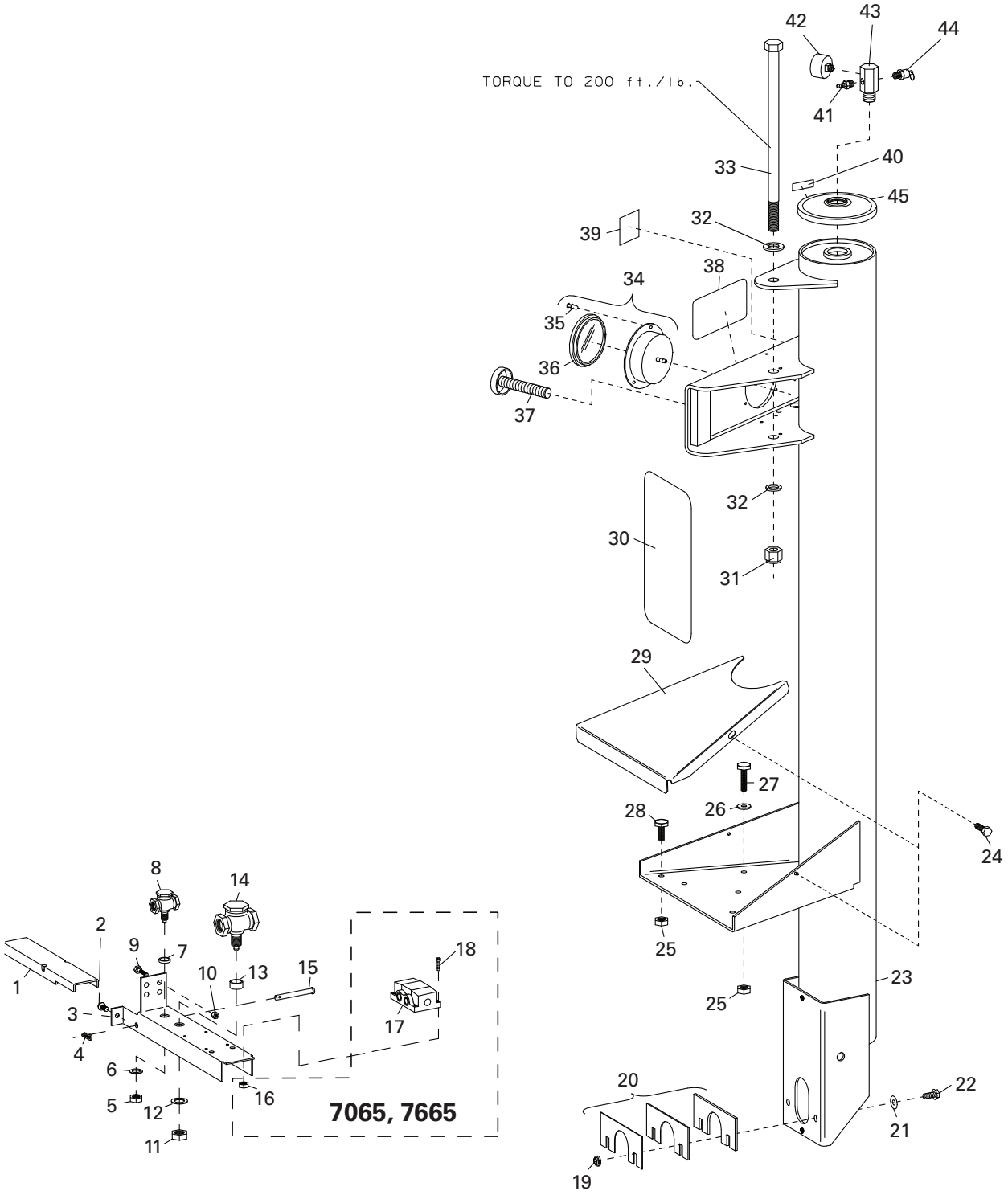

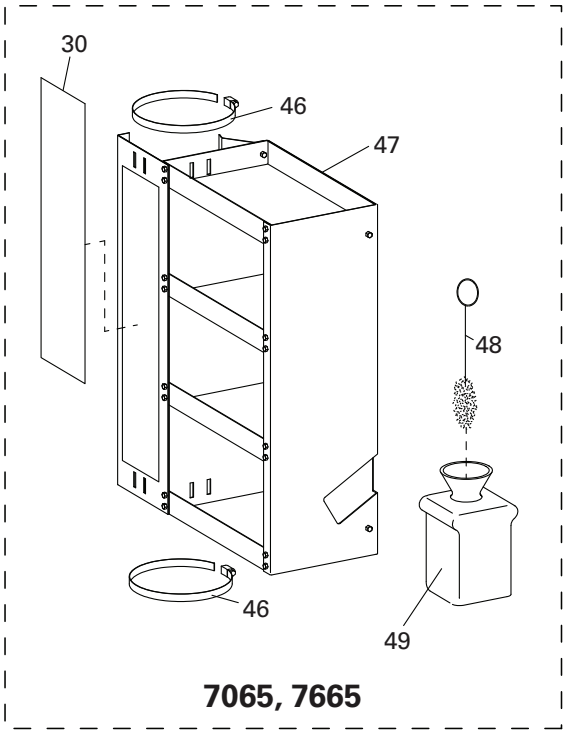

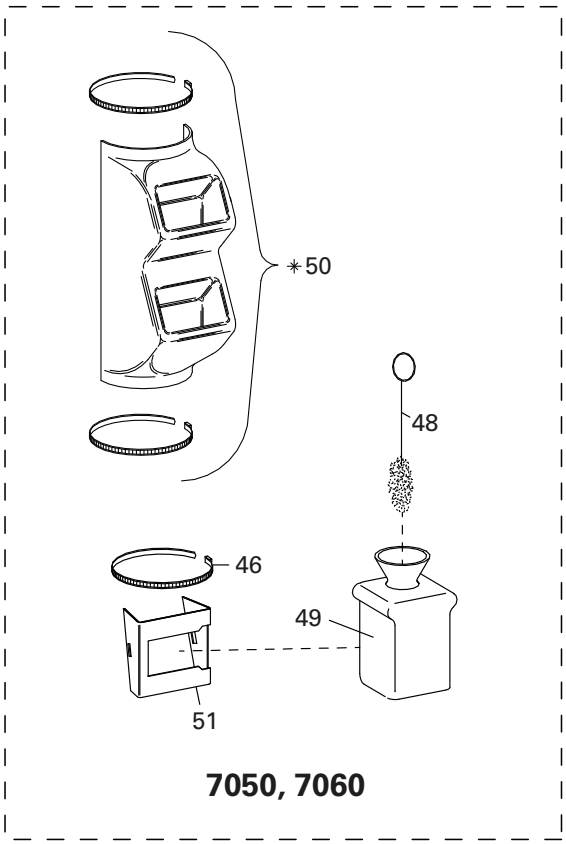

(Inflation Bracket and Tower Assembly)

ITEM	PART NO.	DESCRIPTION
1	8181933	Pedal Inflation
2	8102459	3/8" Self Tap Screw Gr.5
3	8181932	Inflation Brkt.
4	8107407	Hitch Pin Retainer
5	8104611	5/8" N.F. Jam Nut Gr.5
6	8104613	5/8" Ext. Tooth Lock Washer
7	8104673	Bushing (1/4" Valve)
8	8104600	1/4" Valve Comp.
9	8120408	1/4-20 x 1-3/4 H.H. Cap Scr., Gr.5
10	8143169	1/4-20 Whiz Lock Nut, Gr.5
11	8104610	3/4" N.F. Jam Nut Gr.5
12	8104612	3/4" Ext. Tooth Lock Washer
13	8104674	Bushing (3/4" Valve)
14	8106298	3/4" Valve Ported 1/4"-18 NPT
15	8180103	3/8 x 3-1/4 Clevis Pin
16	8181682	10-24 Nylon Insert Lock Nut Gr.5 (5060)
17	8181995	Valve, 4-Way w/Pull Pin (5060)
18	8182001	#10-24 x 3/4" Gr.5 Skt Hd St Cp Scr (5060)
19	8120424	3/8"-16 Wash Hd. Lock Nut Gr.5
20	8182076	Shim Kit
21	8000240	Washer 1" OD x 13/32 ID x 3/16"
22	8107715	3/8-16 x 1-1/4 Hex Hd. Cap Scr, Gr.8.8
23	8184831	Tower/Air Receiver (5040)
	8182305	Tower/Air Receiver (5050, 5060, 5065)
24	8106301	1/4 H.H. Self-Tap Screw Gr.5 (7050)
25	8106303	3/8" Whiz Lock Nut, Gr.5
26	8101018	Washer 0.392 x 0.687 x 0.0478
27	8181137	3/8-16 x 2-1/4 Hex Hd.Cap Scr, Gr.5
28	8106302	3/8" Whiz Lock Screw, Gr.5
29	8182805	Cover - Upper Tower Support (5040, 5050, 5065)
30	8182373	Decal, Warning
31	8182016	3/4"-10 Nylon Insert Lock Nut, Gr.5 (5060)
32	8182457	3/4" SAE Washer
33	8181172	3/4-10 x 7-1/2" Hex Hd. Cap Scr, Gr.5
34	8107985	Flanged Air Gauge w/Fasteners
35	8107983	Plastic Fastener
36	8107517	Gauge Lens, Screw On
37	8181114	Knob Assy-Adjusting (5050, 5060, 5065)
	8182593	Knob Assy-Adjusting (5040)
38	8109888	Inflation Warning Decal
39	8109769	Decal - Release Valve (5060)
40	8182059	Decal, Line Press Gauge
41	8000378	1/4" Brass St. Fitting
42	8108968	Air Gauge
43	8183434	Manifold/Gauge Protector
44	8182599	Safety Valve
45	8182458	Plastic Cap-Tower (5060)
46	8182221	Hose Clamp, 6"
47	8183509	Accessory Box Assembly
48	8000491	Lube Applicator
49	8106259	Lube Bottle (Red)
50	8181554	*Accessory Tray Kit
51	8182167	Lube Bottle Brkt-Red (5060)
	8182809	Lube Bottle Brkt-Red (5040, 5050, 5065)

Pnuematic Diagrams

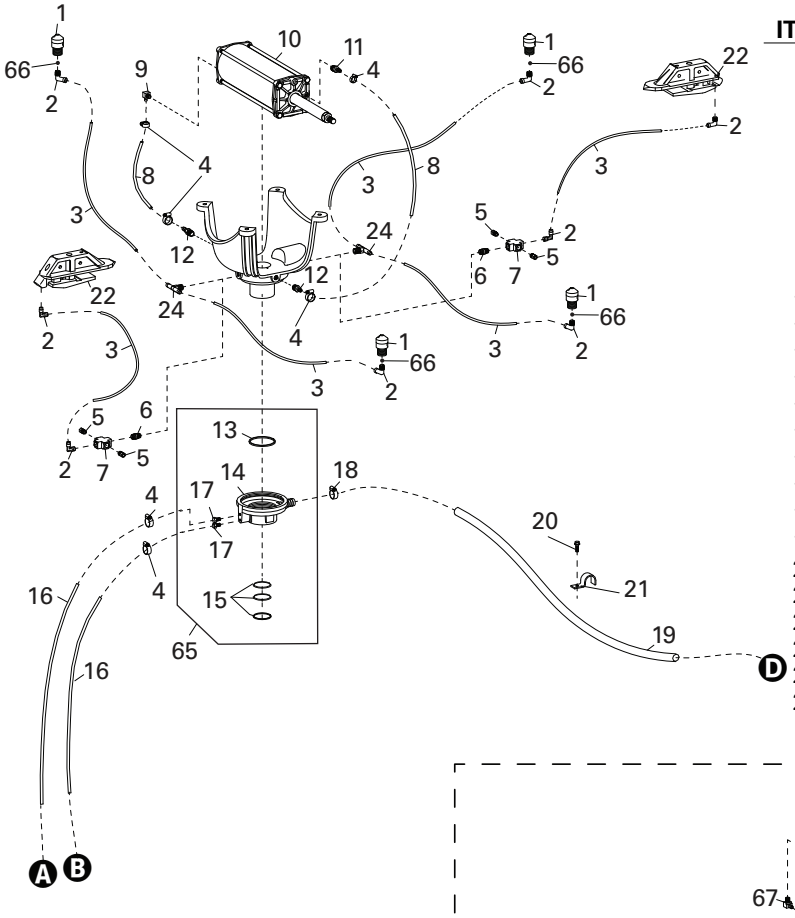

ITEM	PART NO.	DESCRIPTION
1	8182024	Inflation Nozzle
2	8181998	Male Elbow 1/4 NPT x 3/8 Tube
3	8182836	3/8 OD x 15.5" Lg Nylon Tube
4	85606362	Hose Clamp-13mm Spring
5	8181999	Male Elbow 1/4 NPT x 3/8 Tube
6	8182366	Brass Close Nipple 1/4 NPT
7	8182367	Brass Cross Fit. 1/4 NPT
8	8103649	ø1/4 x 12" Hose
9	8110497	Male Elbow 1/8 NPT x 1/4 Hose
10	8182613	Cylinder Assembly-Table Top
11	8182035	Male St Fit. 1/8 NPT x 1/4 Tube
12	8000378	1/4" Brass St. Fitting
13	8181713	O-Ring Seal, Large (2-244)
14	8181349	Rotary Coupling
15	8181712	O-Ring Seal, Small (2-142)
16	8106289	ø1/4" x 22" Hose
17	8104894	St Fitting 1/8 NPT x 1/4 Hose
18	8101346	3/4" Hose Clamp
19	8181954	Hose 3/4" x 31" Lg.-Black
20	8106301	1/4" Hex Hd Self Tap Screw, Gr.5
21	8104564	Ring Clamp ø3/4" Hose (5060)
22	8182249	Carrier/Cover - Clamp Adj.
23	8181995	Valve, 4-Way, Piloted
24	8184467	Male Brch. Tee 1/4 NPT x 3/8 Tube
26	906960	1/4-18 NPT Muffler

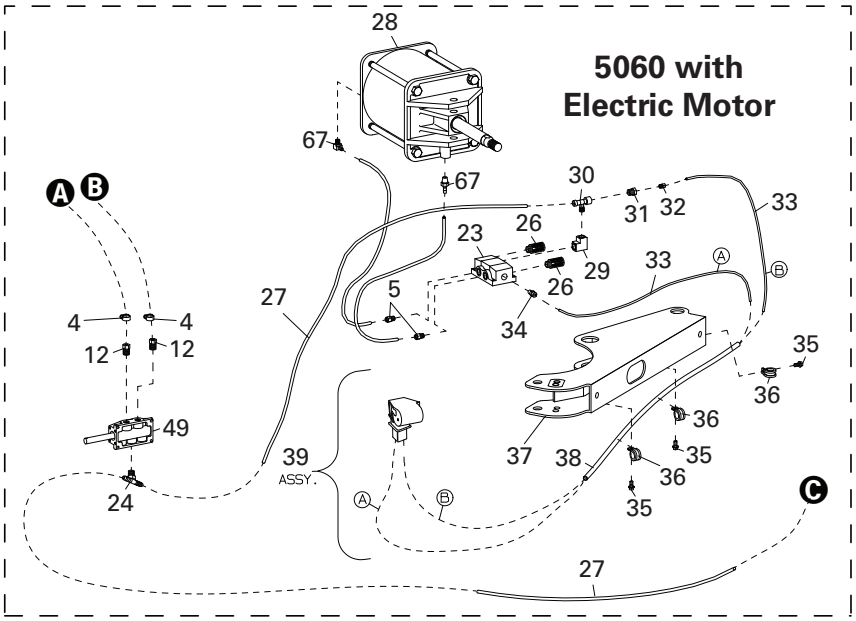

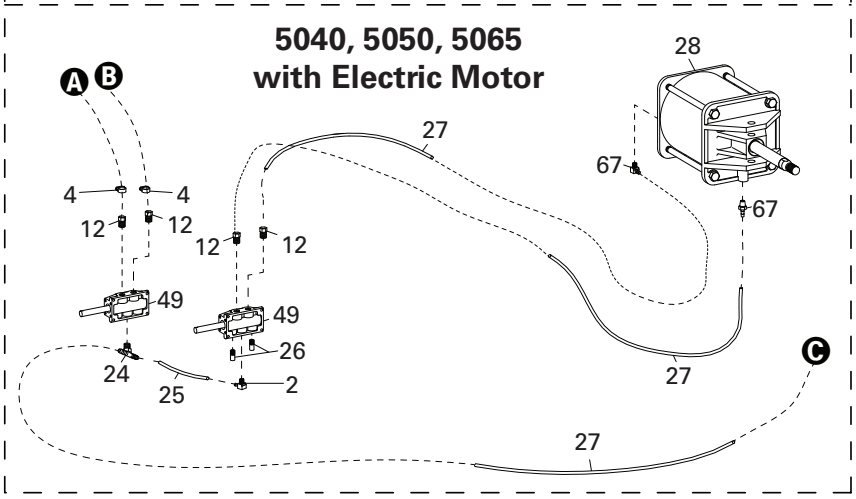

(Pnuematic Diagrams, cont.)

ITEM	PART NO.	DESCRIPTION
27	8184457	Red Rubber Hose, 3/8 x 25"
28	8183312	B.L. Cylinder Assembly w/BL Valve (5040, 5050, 5060)
	8182014	B.L. Cylinder Assembly (5065)
29	8000372	1/4" x 90º Street Ell
30	8183352	Fitting Kit, Special Male Branch Tee
31	8109481	1/4 x 1/8 Brass Bushing (5060)
32	8181996	1/8 NPT x 1/8 Tube Male St. Fit. (5060)
33	8182007	ø1/8" x 60" Nylon Tube (5060)
34	8181987	1/8 NPT x 1/8 Tube Str. Ftg. (5060)
35	8142844	1/4-20 Gr.5 Hex Hd. Self-Tap Scr (5060)
36	8182044	Hose Clamp (5060)
37	8182002	B.L. Arm (5060
38	8182008	Hose 3/8" x 50" (5060)

ITEM	PART NO.	DESCRIPTION
39	8182320	B.L. Handle/Valve Assembly (5060)
40	8181191	Valve, Quick Exhaust
43	8181206	Muffler-1/2" NPT
46	8181190	Air Motor, Gast. 6AM
47	8181931	Bracket, Motor Mounting
48	8184369	Valve, 4-Way w/Pull Pin
49	8181986	Valve, 4-Way w/Pull Pin
65	8182619	Rotary Coupling Assembly
66	8182025	Steel Ball
67	8000376	ELL 90º 1/4 Hose Fitting
	8184256	ELL 90º 3/8 Hose Fitting

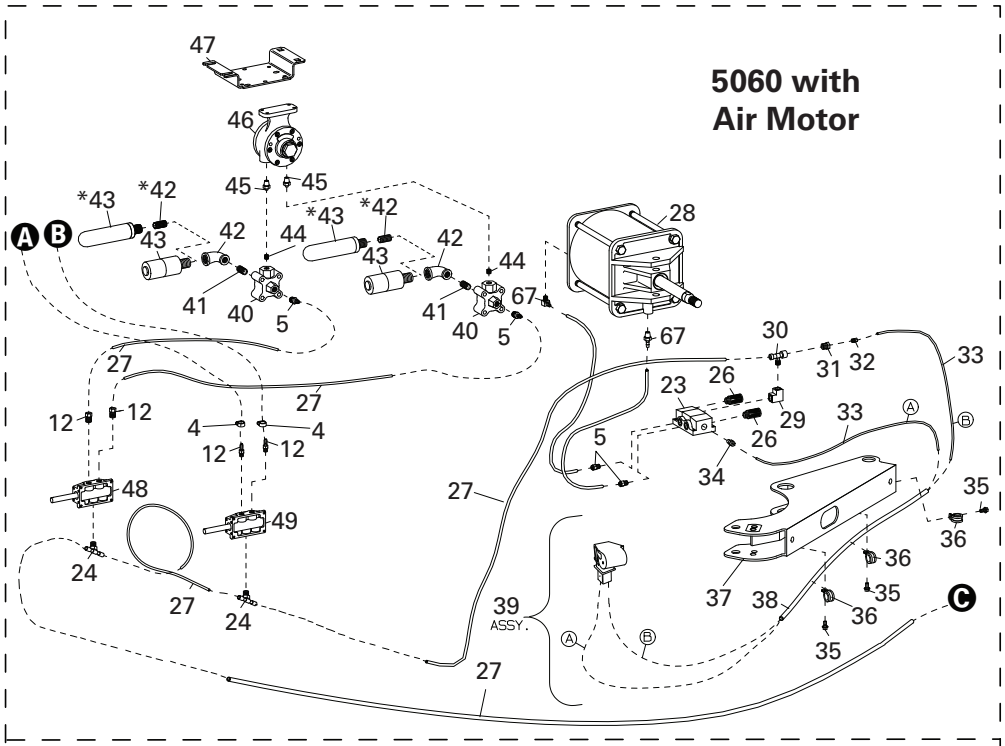

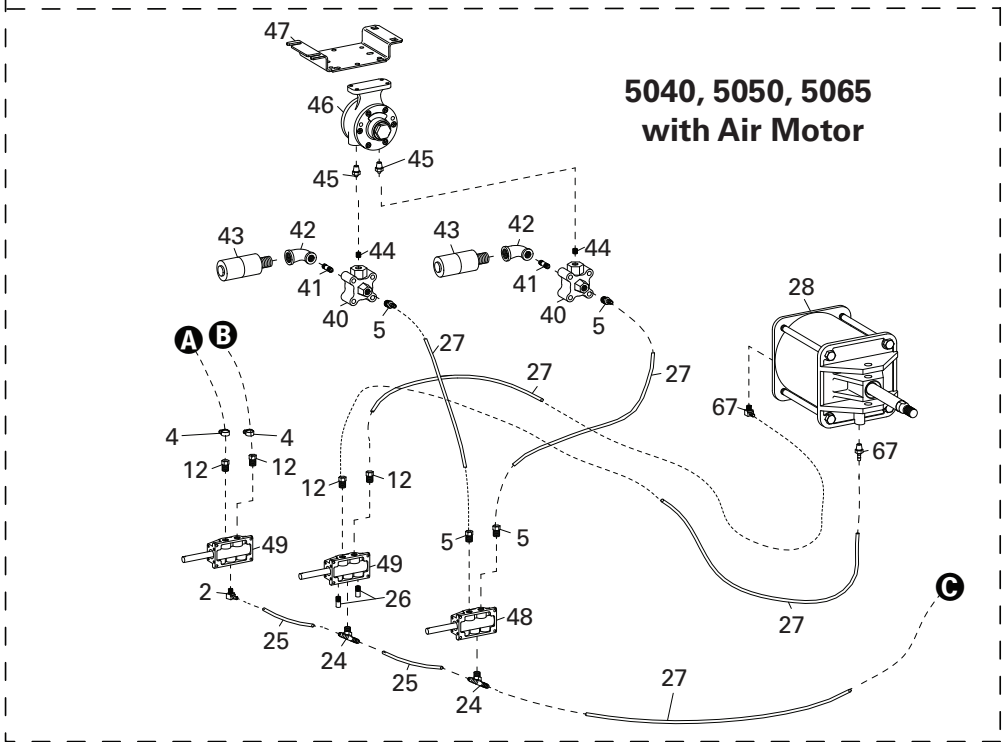

(Pnuematic Diagrams, cont.)

ITEM	PART NO.	DESCRIPTION
4	85606362	Hose Clamp-13mm Spring
14	8184459	Black Rubber Hose, 3/8 x 25"
15	8110325	1/4" NPT Male Run Tee
16	8182038	Nylon Tube 1/4 OD x 12.5" Lg.
17	8182035	Male St Fit. 1/8 NPT x 1/4 Tube
18	8111083	Regulator
19	8109472	1/8" Inline Filter
20	8109471	1/8" Brass Hex Nipple
21	8109468	Pressure Repeater
22	8110497	Male Elbow 1/8 NPT x 1/4 Hose
23	8103649	ø1/4 x 12" Hose
24	8111255	Spl Tee-1/4 NPT x 3/8 x 1/4
25	8109466	Valve-Piloted
26	8110496	Volumn Chamber
27	85000816	Pressure Limiter
	85009136	**Pressure Limiter (5060)
28	8107517	Gauge Lens, Screw On
29	8107985	Flanged Air Gauge w/Fasteners
30	8000378	1/4" Brass St. Fitting
31	8108968	Air Gauge
32	8109784	Manifold/Gauge Protector
33	8182599	Safety Valve (5060)
	8104968	Safety Valve
34	8000481	Hose 1/4" x 6
35	8183502	Manifold Bleed Valve Assembly
36	8182090	Hose 3/4" x 65" Lg.

ITEM	PART NO.	DESCRIPTION
37	8105822	ø9/16" Hose Clamp
38	8410419	Air Chuck
39	8182005	Nylon Tube 3/8" x 18-34" Lg.
40	8181998	Male Elbow 1/4 NPT x 3/8 Tube
41	8101898	3/8" Hose Fitting
42	8105671	End Cap, 1/4" Valve
43	8102468	Poppet Spring, 1/4" Valve
44	8104649	Poppet, 1/4" Valve
45	8104600	1/4" Valve Comp.
46	8106288	Hose 1/4 x 16-1/4"
47	8183352	Fitting Kit, Special Male Branch Tee
48	8106298	Valve PPT, 1/4-18 NPT
49	8104651	Spring, 3/4" Valve
50	8104652	Poppet, 3/4" Valve
51	8106298	3/4" Valve Ported 1/4"-18 NPT
52	8107924	3/4 Nylon Elbow
53	8182020	3/4 NPT x 1/4 NPT St. Fit.
	8101898	3/8" Hose Fitting
54	8101346	3/4" Hose Clamp
55	8181993	Hose, 3/4" x 15 1/2"
56	8182464	Strainer Screen
57	8104573	Fitting, Straight-3/4"
58	8000372	1/4" x 90° Street Ell
59	8182827	Filter Lubricator
60	8182497	Hose 3/8" x 36" Lg.
61	8181147	Hose 3/8 x 17-1/4" Lg.

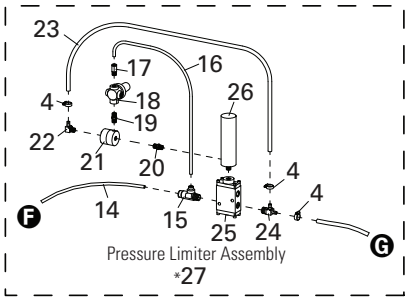

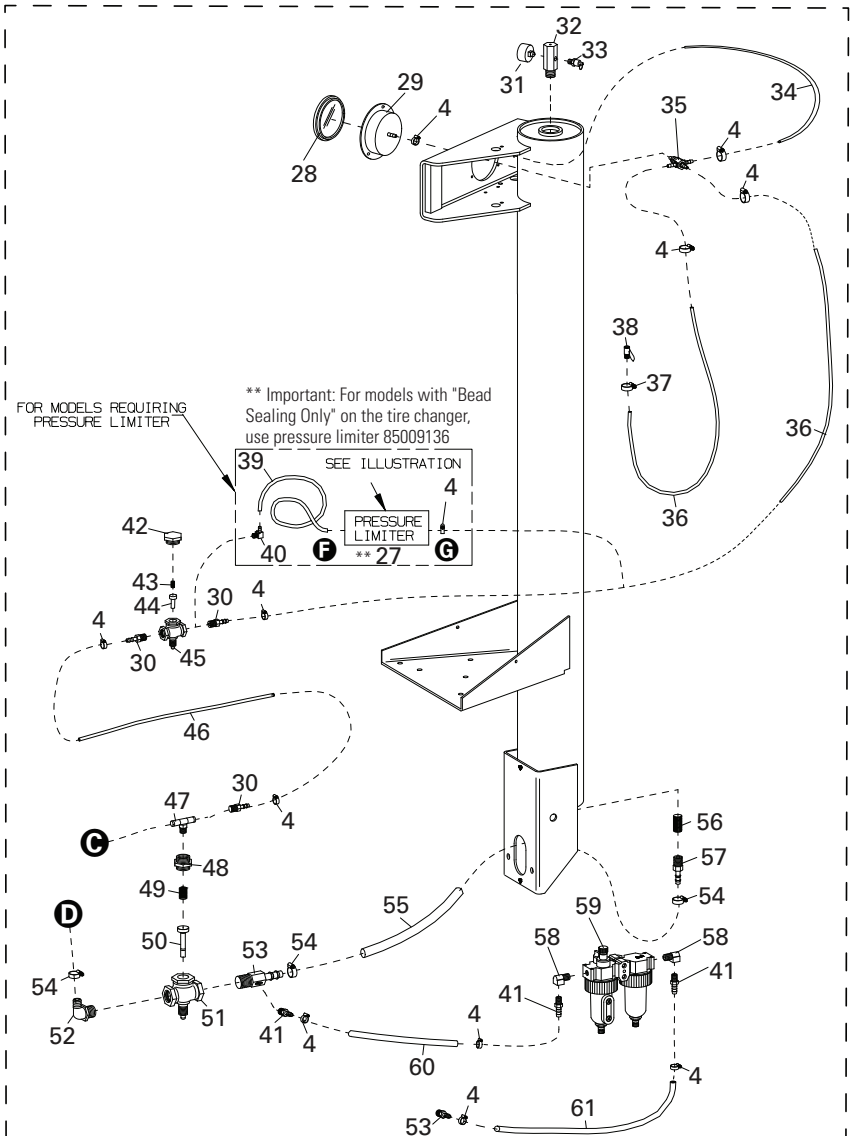

Electric Schematic

Wiring Diagrams

Export 220VAC

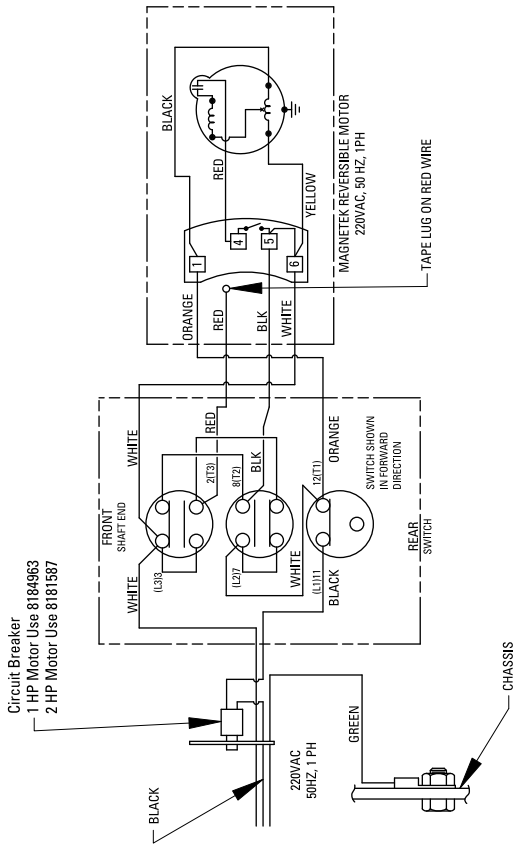

To reverse rotation, interchange red and black wires at motor.

Domestic & C.S.A.

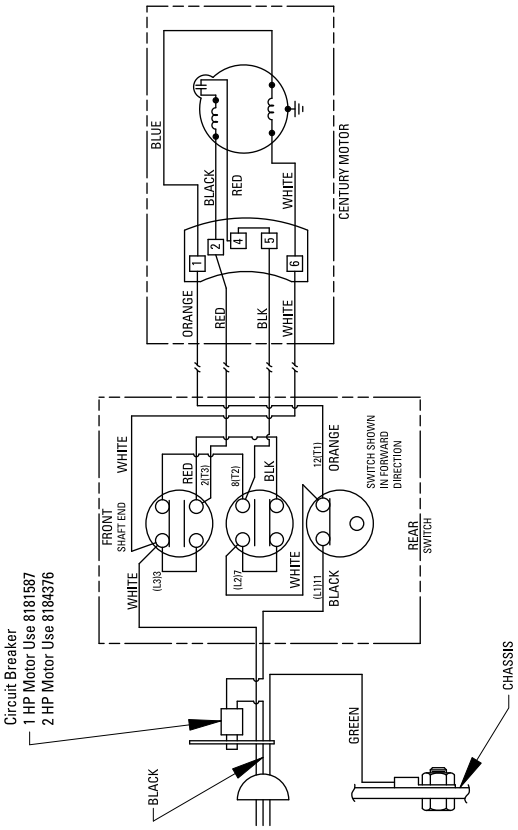

To reverse rotation, interchange red and black wires at motor.

Notes

Notes

Rim Clamp® Tire Changer

All-Air Unit Compressed Air Requirements

COATS® Rim Clamp® tire changers that are powered entirely by air (no electric motor) require a single compressed air power source. Refer to the table below for exact specifications.

Tire Changer Model	Compressor Size	Capable of
5050A	**5 HP**	**14-15 SCFM at 150 PSI**
5060A	**5 HP**	**14-15 SCFM at 150 PSI**
5065A	**5 HP**	**14-15 SCFM at 150 PSI**

Oiler and Water Separator Maintenance

The oiler and water separator (on units so equipped) require weekly service. Oil and water levels (indicated on the level gauge on the side of each bowl) should be checked regularly.

1. On units without automatic drain (manufactured before August 1996), drain the water from the separator by unscrewing the petcock on the bottom of the bowl. Allow water to drain and tighten petcock securely by hand.

2. Add oil to the oiler if the fluid level is more than 1/4" from the top of the gauge. Remove the filler plug in the top of the oiler, and add SAE 10W non-detergent oil or an air tool oil to bring the level up to 1/4" from the top of the gauge. Replace the filler plug and clean up any spilled oil.

3. On units manufactured before August 1996, adjust the oil flow by pulling the red flow adjustment ring up and turning it to increase or decrease the flow. Push the ring down to lock. Watch the formation of oil drops in the see-through oil chamber. Continually cycle the bead loosener through full strokes and count the drops during the cycles. The delivery of oil to the air line should be about 1 drop per 10 cylinder cycles. Adjust the flow as required.

Note: Some older units may use an adjustment screw on top of the oiler instead of the red ring and see-through chamber. To adjust these units, turn the screw fully clockwise to stop the flow, then turn it back counterclockwise 1/4 turn. Units manufacturered after August 1996 are factory pre-set and require no adjustment.

Transmission Lubrication

Check the fluid level in the tabletop transmission with the oil check dipstick. If fluid shows on the dipstick, it is properly filled. If no fluid is present on the dipstick, add a high quality SAE 80/90 gear lubricant. Add lubricant and check the level. Stop adding lubricant when it shows on the dipstick.

Air Gauge Check and Recalibration

1. Inflate a standard 15" passenger car tire/wheel assembly to 32 PSI. Use a high quality stick-type pressure gauge to verify the pressure. Attach the tire changer's inflation hose to the valve stem and check the pressure reading on the air gauge. If it does not read 32 PSI, recalibrate the gauge.

2. Remove the screw-on lens. Loosen the 2 screws on the face of the gauge. Loosen them just enough so that the gauge face moves. Do not remove the screws.

3. Rotate the gauge face until the 32 PSI mark is aligned with the gauge needle. Tighten the 2 screws and replace the lens.

Danger, Warning, Caution, and Instructional Decals

Always make the cleaning of these important decals a part of your regular maintenance routine. If they are damaged or illegible, replace them immediately. Your safety, and the safety of others is involved!

 © Copyright 1995 Hennessy Industries and COATS All Rights Reserved Printed in USA