coats®

6275HS Wheel Balancer

Parts Identification

READ these instructions before placing unit in service KEEP these and other materials delivered with the unit in a binder near the machine for ease of reference by supervisors and operators.

HENNESSY INDUSTRIES, INC.
1601 J. P. Hennessy Drive, LaVergne, TN USA 37086-3565 615/641-7533 800/688-6359 www.ammcoats.com
HENNESSY INDUSTRIES INC. Manufacturer of AMMCO®, COATS® and BADA® Automotive Service Equipment and Tools.
Manual Part No.: 85606352 00
Revision: 02/09

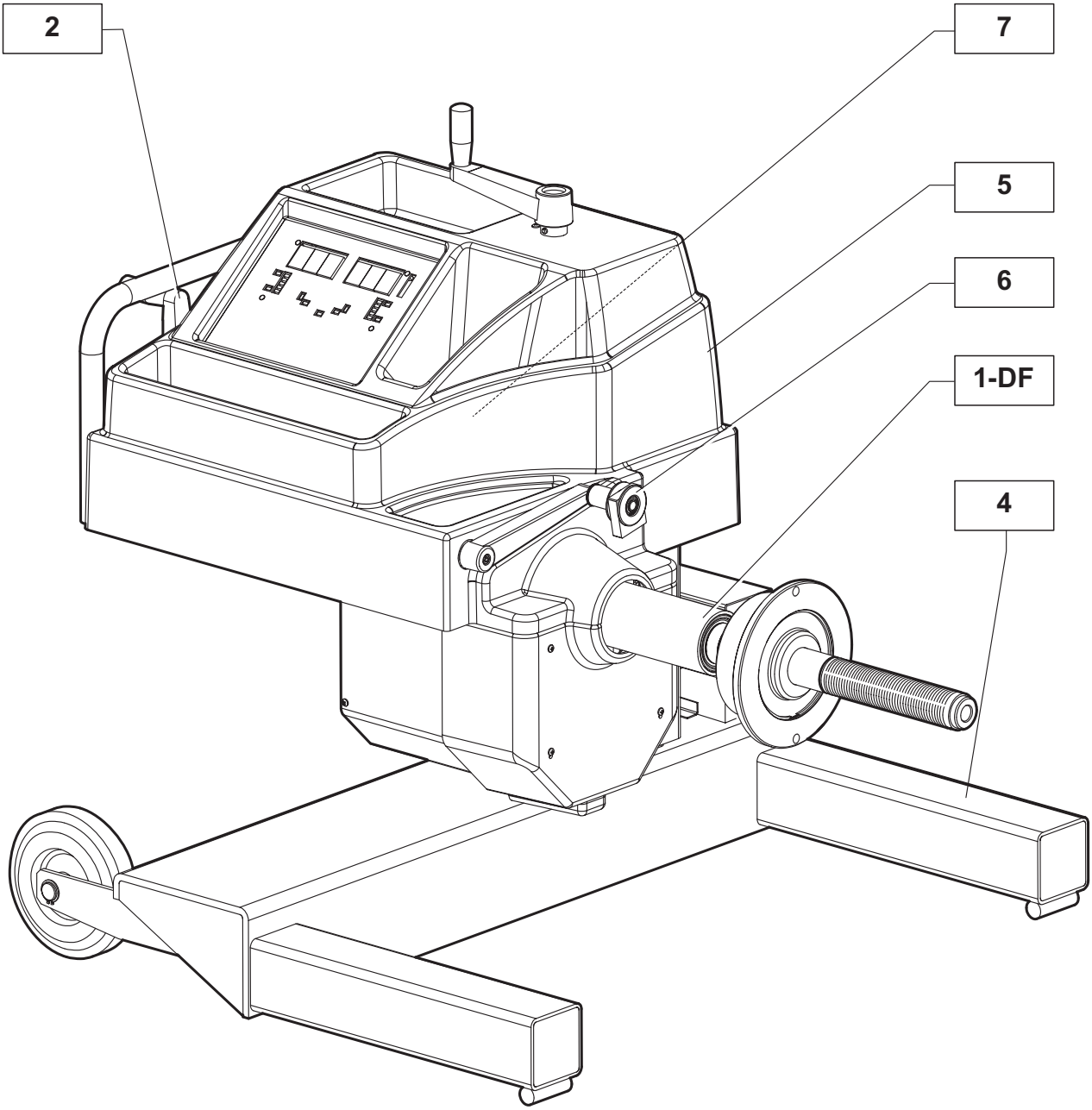

D0677-1-DF	0638-1	**1D**	**SHAFT ASSEMBLY+POSITION PICK-UP**	
D0677-2	0638-2	**2**	**SPINNER**	
D0677-4	0677-4	**4**	**CASING (1) FIXED**	
D0677-5	0677-5	**5**	**CASING (2) MOBILE**	
D0677-6	0677-6	**6**	**"DISTANCE+DIMETER" AUTOMATIC GAUGE**	
D0677-7	0677-7	**7**	**POWER UNIT**	

*** Parts on the market**

1DF

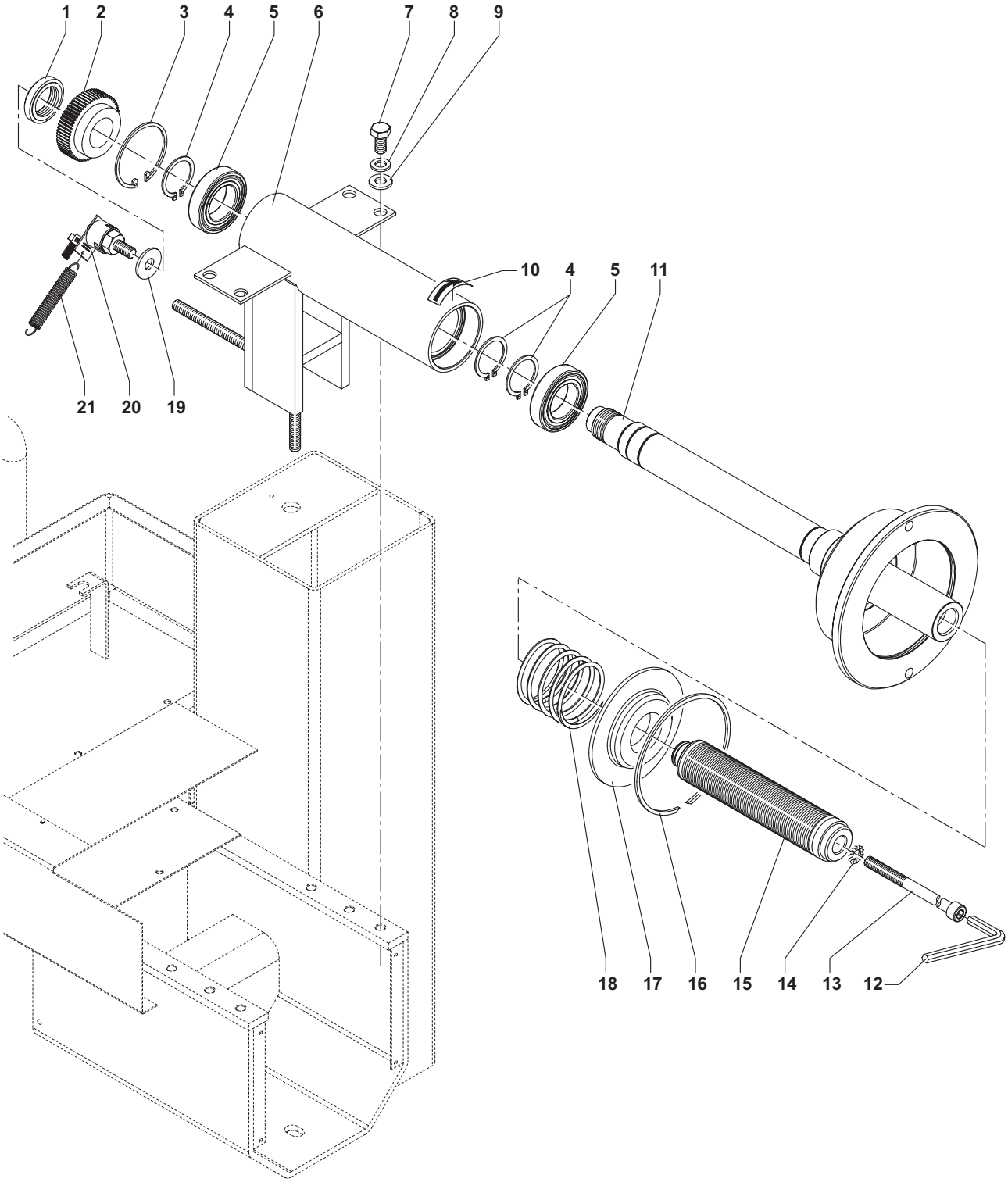

N.	CODE	DESCRIPTION	N.	CODE	DESCRIPTION	N.	CODE	DESCRIPTION
1	323333030	* SELF-LOCKING RING NUT	11	42FM72455	COMPLETE SHAFT	21	18FB76761	SPRING
2	42FM41176	GEAR	12	114008002	* ALLEN WRENCH			
3	342000062	* SEEGER RING I62	13	312120137	* SCREW			
4	341000035	* SEEGER RING E35	14	325046010	* SPRING WASHER			
5	020600702	* BEARING	15	85009009	THREADED END Ø 40			
6	42FM79639	LEAF SPRING SET	16	344200118	* SEEGER RING			
7	311220119	* SCREW	17	42FP41056	COVER			
8	325046010	* SPRING WASHER	18	181198630	SPRING			
9	325035010	* FLAT WASHER	19	326035011	FLAT WASHER			
10	040010101	STICK-ON ARROW	20	86SD76742	COMPL. POSITION PICK-UP			

2

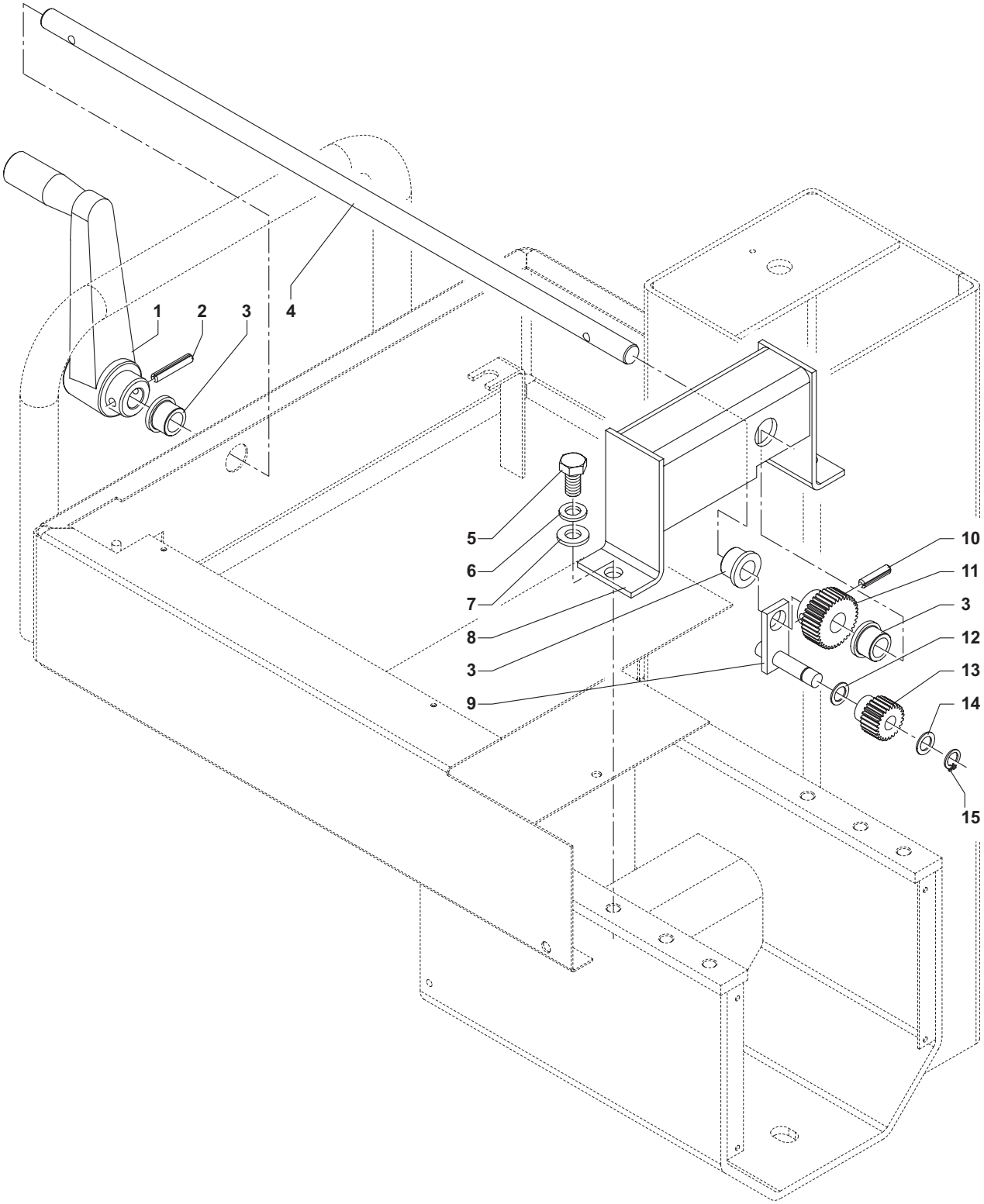

N.	CODE	DESCRIPTION	N.	CODE	DESCRIPTION	N.	CODE	DESCRIPTION
1	067806018	* KNOB	11	42FB72561	* GEAR			
2	335310075	* ELASTIC DOWEL	12	347001600	RING			
3	21FB14201	BUSH	13	42FB76823	GEAR			
4	42FB72560	PIN	14	346001016	FLAT WASHER			
5	311220119	* SCREW	15	341000010	* SEEGER RING			
6	325046010	* SPRING WASHER						
7	325035010	* FLAT WASHER						
8	42FB80158	GEAR SUPPORT						
9	42FB72563	TRANSMISSION HUB						
10	335310073	ELASTIC DOWEL						

4

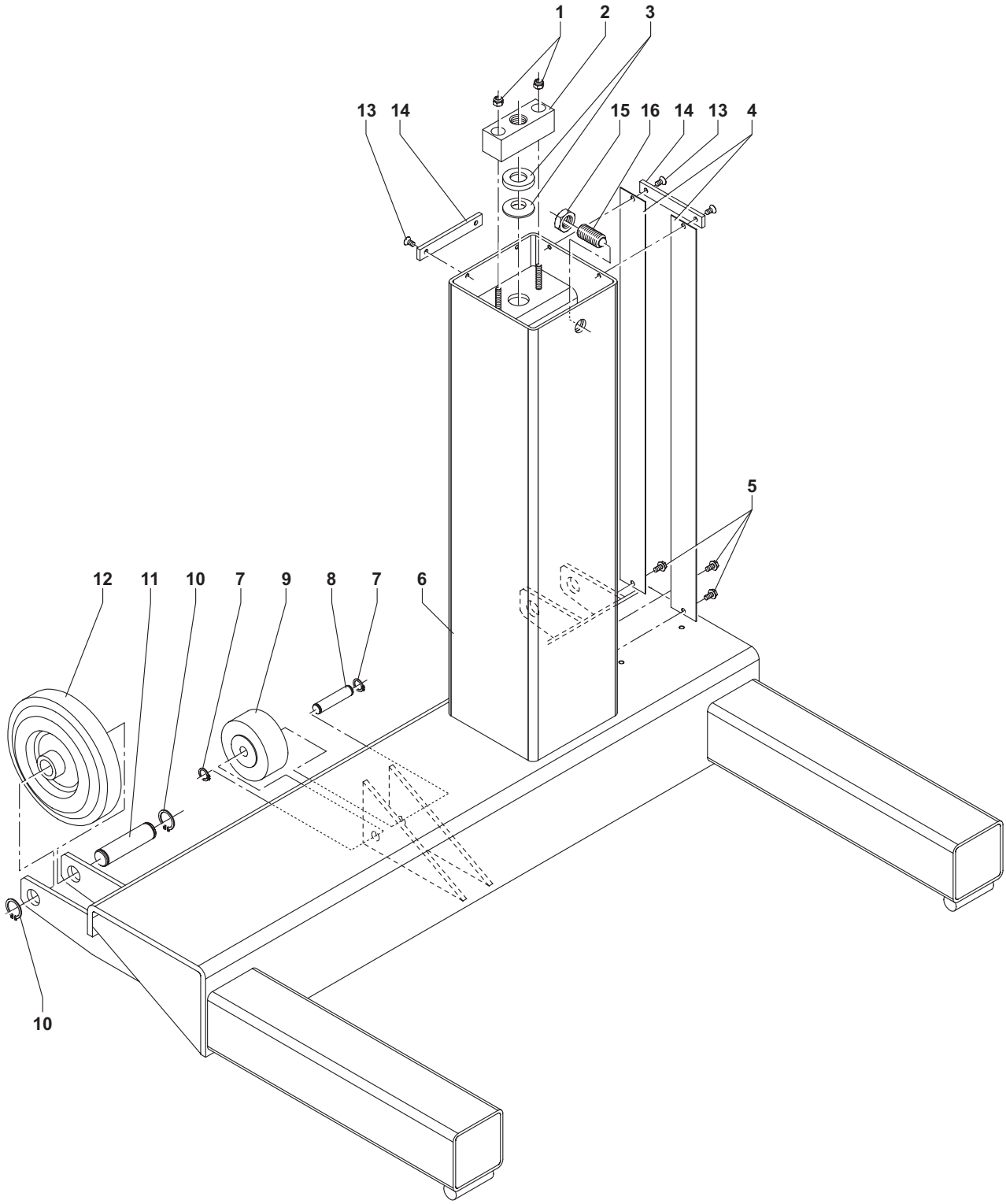

N.	CODE	DESCRIPTION	N.	CODE	DESCRIPTION	N.	CODE	DESCRIPTION
1	321233006	* SELF-LOCKING NUT	11	42FB79219	PIN			
2	42FB80402	THREADED PLATE	12	151160201	* REAR WHEEL			
3	034000016	* WASHER	13	313220052	* SCREW			
4	42FB83858	LEAF	14	42FB82945	* LEAF			
5	310230510	* SCREW	15	321232018	* NUT			
6	42FB80262	BASE PLATE	16	061006151	* THREADED BALL SPRING			
7	341000012	* SEEGER RING						
8	42FB79608	PIN						
9	152075123	* WHEEL						
10	341000020	* SEEGER RING						

5

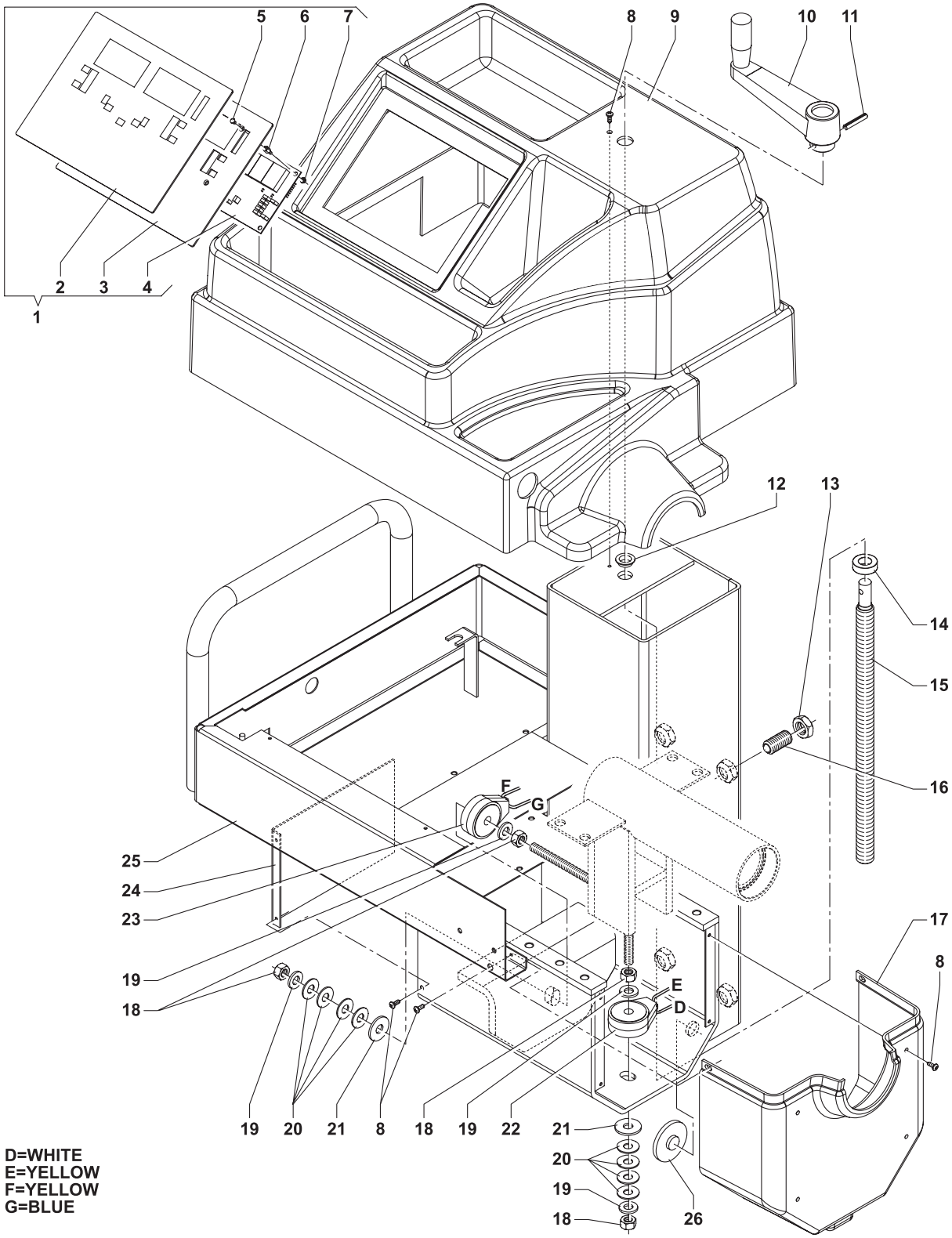

N.	CODE	DESCRIPTION	N.	CODE	DESCRIPTION	N.	CODE	DESCRIPTION
1	86PR80499	COMPLETE PANEL C206	6	527034980	* SPACER	17	14FB76214	COVER SHAFT ASSEMBLY
1	86PR80822	COMPLETE PANEL P7910	7	321232003	* NUT	18	321212010	* EXAGONAL NUT
1	86PR86118	COMPLETE PANEL 6275HS	8	314931069	* SELF-THREADING SCREW	19	325035010	* FLAT WASHER
2	05PR76852	CONTROL PANEL C206	9	14FB80387	COVER WITHWEIGHT TRAY	20	345122515	* CUP SPRING
2	05PR77050	CONTROL PANEL P7910	10	067806018	* KNOB	21	326035011	* FLAT WASHER
2	05PR86005	CONTROL PANEL 6275HS	11	335310075	* ELASTIC DOWEL	22	940701232	PIEZO ASSEMBLY
3	42PR80458	PANEL SUPPORT	12	21FB14161	BUSH	23	940701233	PIEZO ASSEMBLY
4	86SC77261	* COMPUTER BOARD C206	13	934399295	* EXAGONAL NUT	24	42FB80498	COVER
4	86SC78043	* COMPUTER BOARD P7910	14	025110206	* BEARING	25	42FB80379	MOBILE COLUMN
4	86SC86119	* COMPUTER BOARD 6275HS	15	42FB80453	SCREW	26	215005000	PAD
5	315231015	* SCREW	16	061006151	* THREADED BALL SPRING			

6

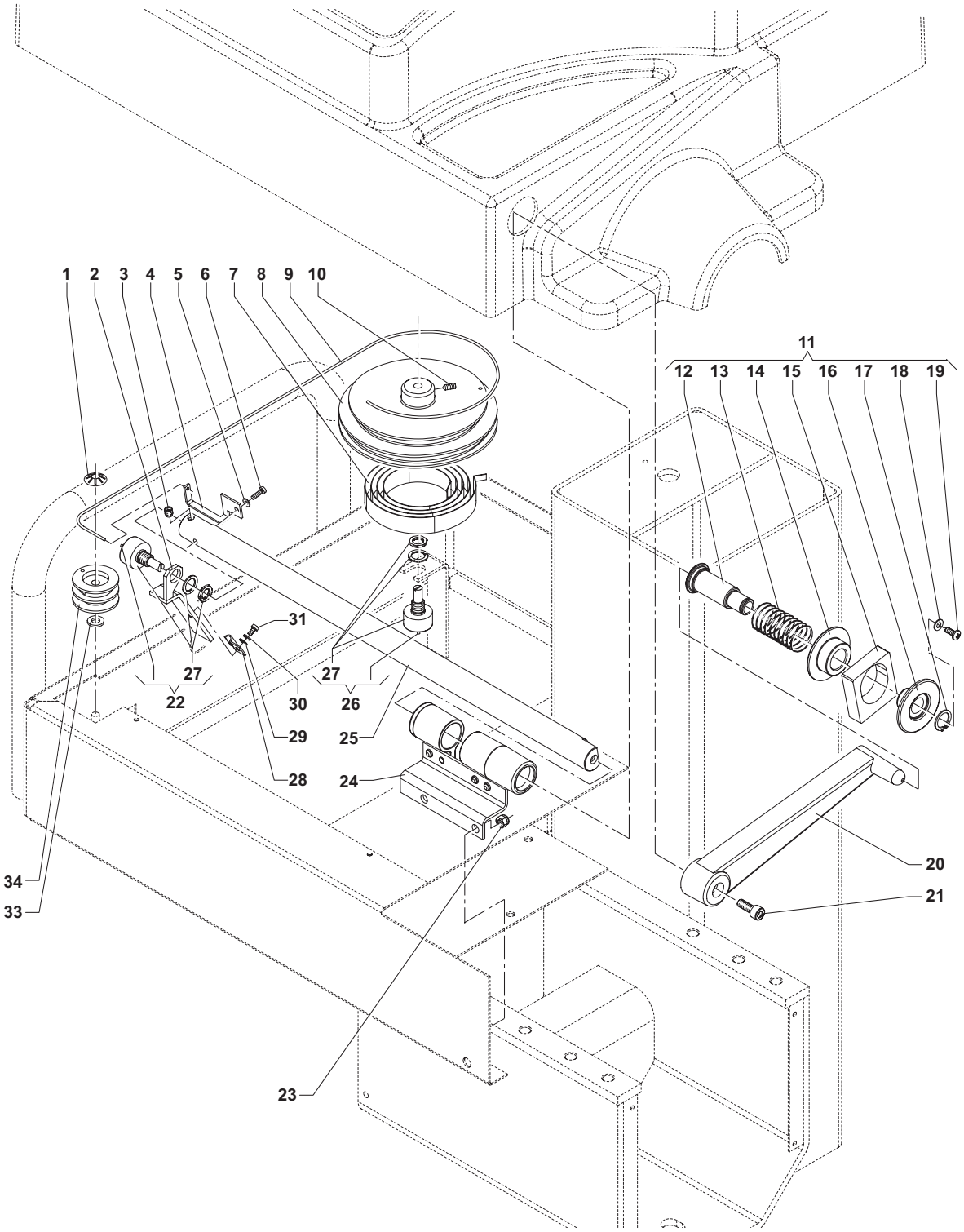

N.	CODE	DESCRIPTION	N.	CODE	DESCRIPTION	N.	CODE	DESCRIPTION
1	344200060	* RING	13	18FC77166	SPRING	25	42FC76582	DISTANCE GAUGE ROD
2	42FC80140	SADDLE	14	42FC77212	PINCER	26	86SB75463	DIAM. GAUGE + POTENT.
3	319216065	* SCREW	15	42FC77213	WEIGHT PUSHER	27	C588020312	POTENTIOMETER
4	42FC40278	BRACKET	16	42FC77210	REVOLVING UNIT	28	420610639	CABLE RETAINER
5	325035003	* FLAT WASHER	17	341000013	* SEEGER RING	29	325035003	* FLAT WASHER
6	314231018	* SCREW	18	325035004	* FLAT WASHER	30	325046003	* SPRING WASHER
7	18FC38385	SPIRAL SPRING	19	314931069	* SELF-THREADING SCREW	31	314231015	* SCREW
8	217025965	PULLEY	20	217027833	INDEX FOR DIST. GAUGE	33	325035006	* FLAT WASHER
9	C523000018	PLAIT	21	312120071	* SCREW	34	420520853	DISTANCE GAUGE RETURN
10	319218035	* SCREW	22	86SB82489	* DIST. GAUGE + POTENT.			
11	46FC76792	COMPL. INDEX FOR DIST. GAUGE	23	321233005	* EXAGONAL NUT			
12	42FC77209	PIN	24	46FC80141	GAUGE BRACKET			

7

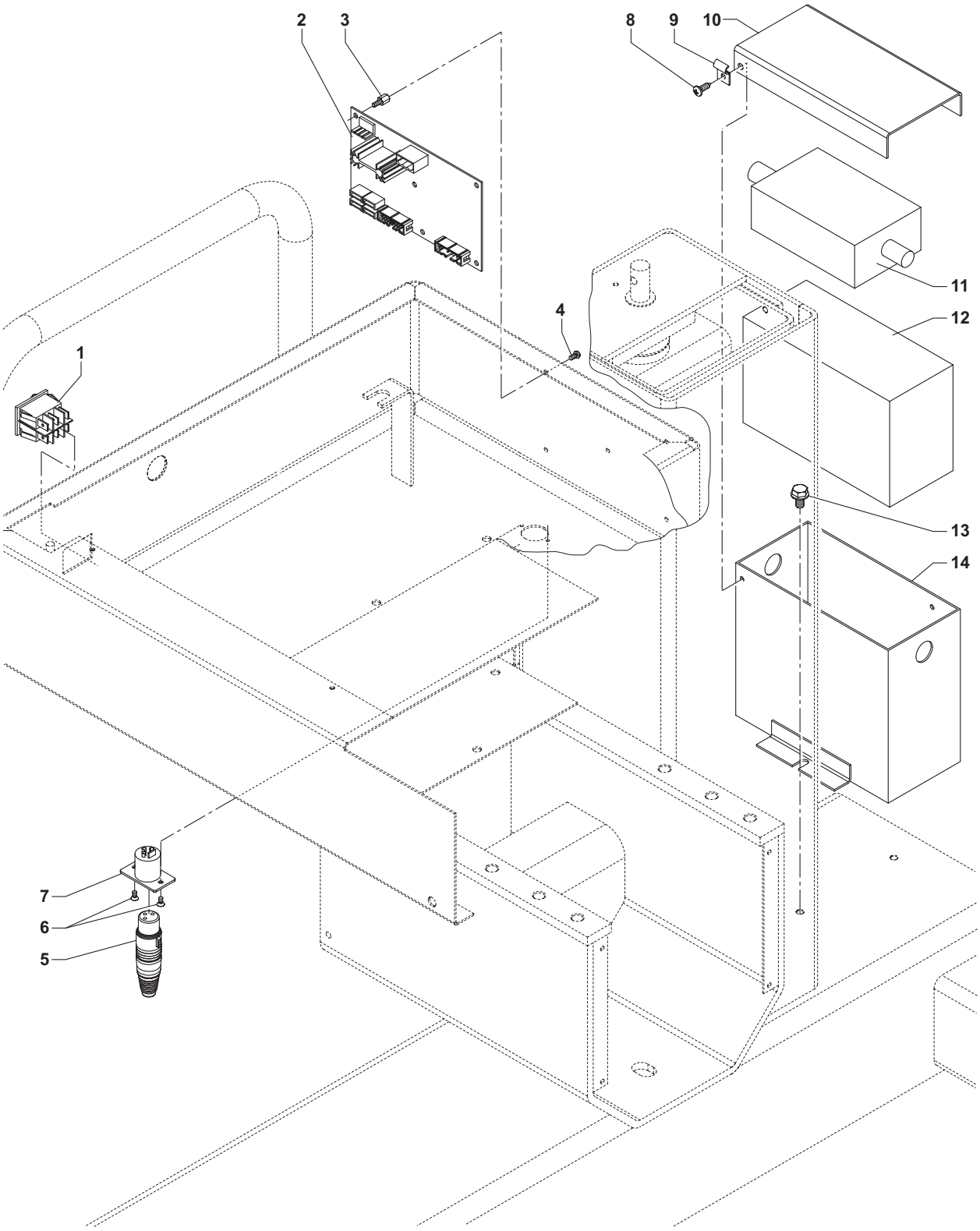

N.	CODE	DESCRIPTION	N.	CODE	DESCRIPTION	N.	CODE	DESCRIPTION
1	C513240419	PLATFORM SWITCH	11	738000143	* BATTERY CHARGE			
2	67M73758C	POWER SUPPLY BOARD	12	733970712	* BATTERY			
3	C27034980	* SPACER	13	310230610	* SCREW			
4	314232015	* SCREW	14	42SZ82977	* BATTERY BOX			
5	C92048800	XLR CONNECTOR						
6	315231015	* SCREW						
7	C91048620	PANEL PLUG						
8	314931069	* SELF-THREADING SCREW						
9	420610639	* CABLE RETAINER						
10	42SZ82978	* COVER						

85606352 00 02/09 © Copyright 2009 Hennessy Industries and COATS All Rights Reserved