775/875 Wheel Balancer

Parts Identification

READ these instructions before placing unit in service KEEP these and other materials delivered with the unit in a binder near the machine for ease of reference by supervisors and operators.

HENNESSY INDUSTRIES, INC.
1601 J. P. Hennessy Drive, LaVergne, TN USA 37086-3565 615/641-7533 800/688-6359
HENNESSY INDUSTRIES INC. Manufacturer of AMMCO®, COATS® and BADA® Automotive Service Equipment and Tools.
Manual Part No.: 85008895 00
Revision: 11/07

Parts Identification

The following pages include parts breakdowns with exploded view illustrations to help with ordering replacement or spare kits. Assemblies are noted where it is recommended that individual parts not be ordered separately. Every effort is made to supply accurate exploded views, however, due to interim changes in manufacturing operations, some units may not be exactly as illustrated.

Shaft Assembly

ITEM	PART NO.	DESCRIPTION
4	85008949	Drive Pulley
5	85008950	Encoder Phase Disc
7	85008914	Bearing
8	85008976	Leaf Spring Set
9	8110241	Weight Position Decal
16	85009009	40mm Shaft
18	85008951	Spring Cover
19	85008915	Spring Shaft Assembly

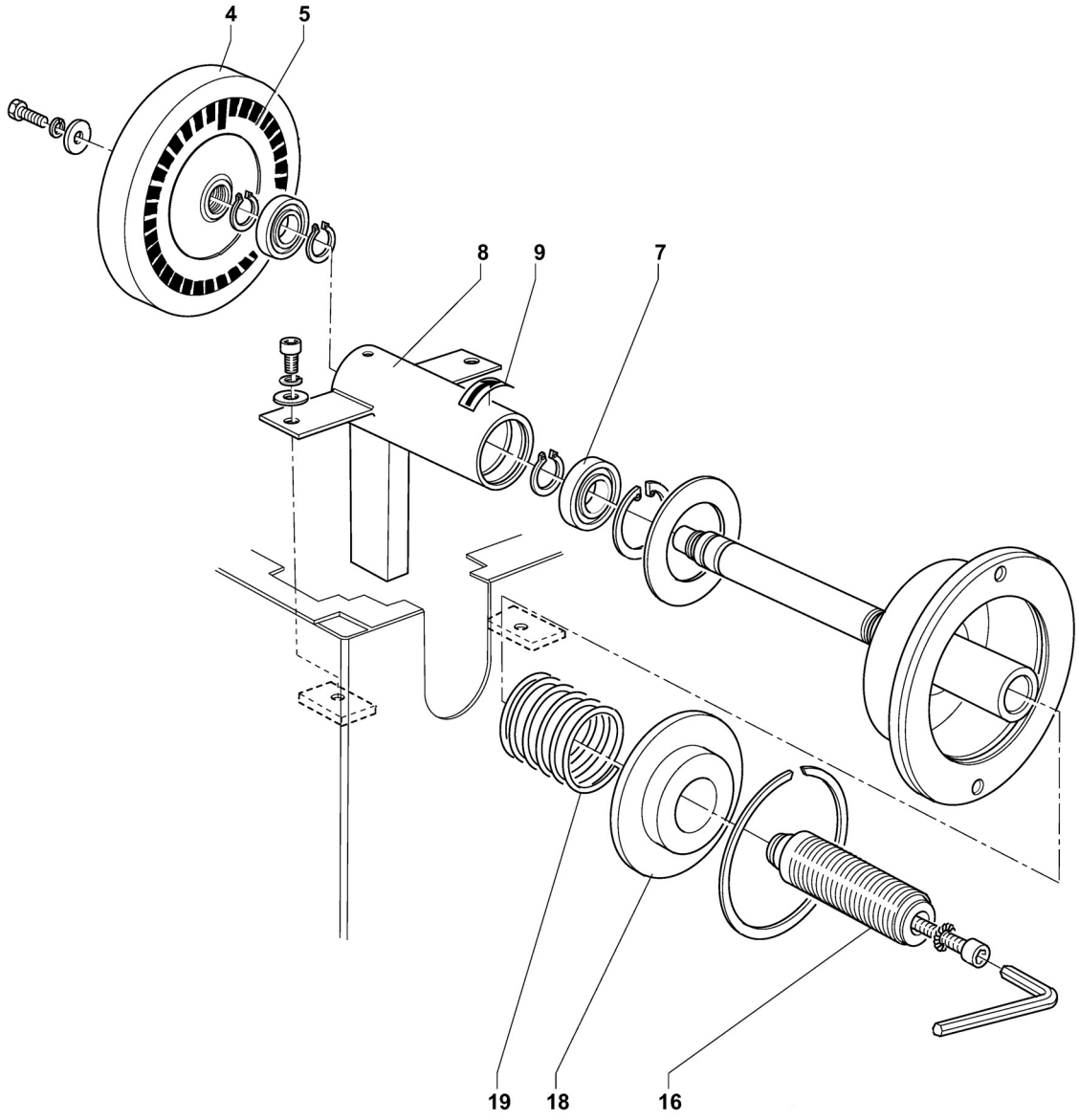

Motor & Piezo Assembly

ITEM	DESCRIPTION
P/N	***85008954 115V Motor Assembly***
11	Screw
12	115V Motor
13	Motor Key
14	Drive Pulley
15	Flat Washer
16	Screw
17	Spring Washer
19	Drive Belt
P/N	***85008983 Piezo Kit***
22	Piezo Assembly
27	Piezo Assembly
P/N	***85008984 Piezo w/connectors Kit***
20	Flat Washer
21	Hex Nut
22	Piezo Assembly
23	Cup Spring
24	Flat Washer
25	Threaded Bar
26	Eye Rod
27	Piezo Assembly

ITEM	PART NO.	DESCRIPTION
1	85008953	Compl. Position Pick Up
5	85008910	Position Pick Up Board
12	85008913	115V Motor
19	85008905	Drive Belt
28	85008979	Spacer No BP

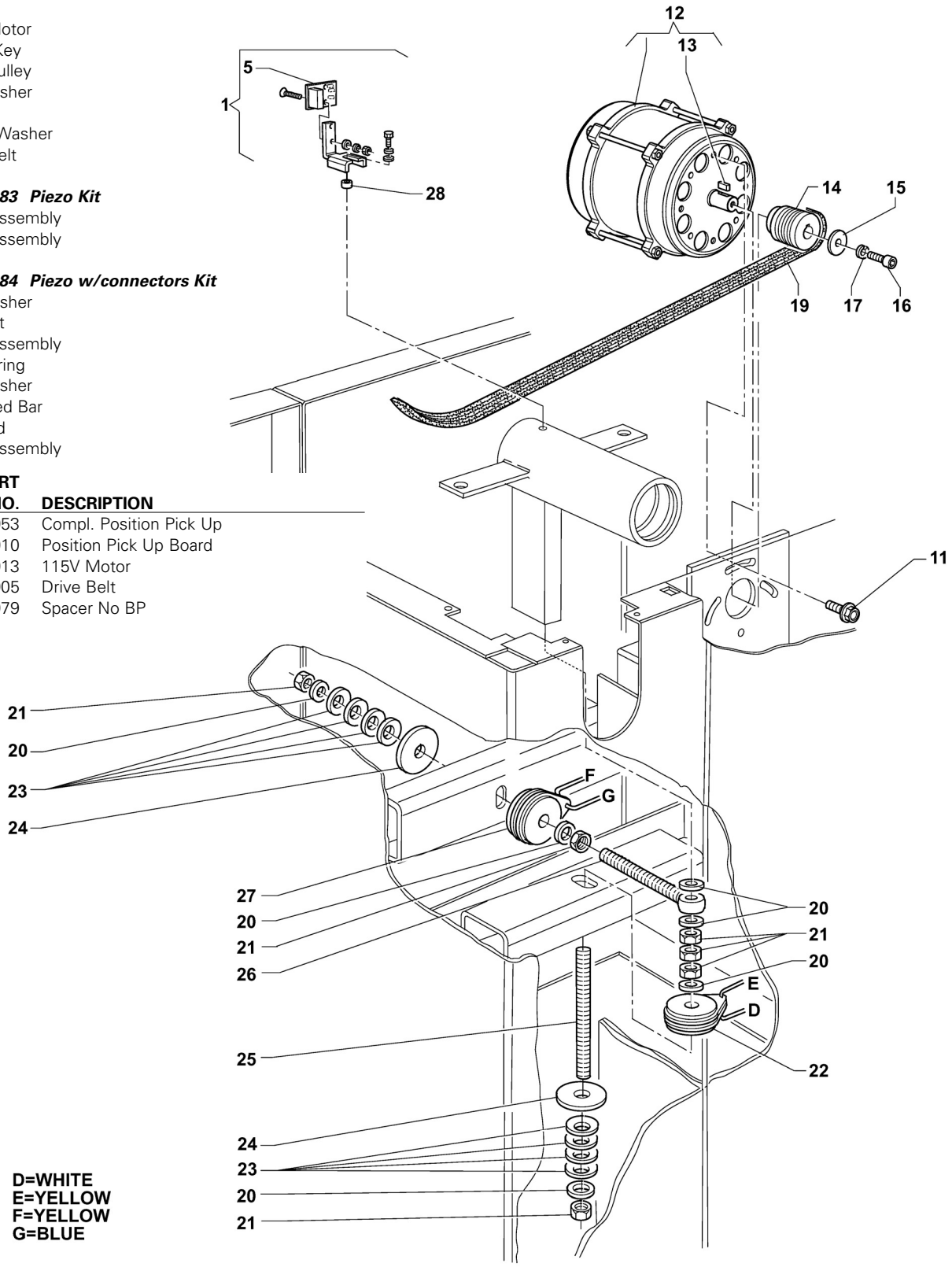

Chassis & Touch Panel Assembly (875)

ITEM	DESCRIPTION
P/N	***85008964 Touch Panel Assembly***
2	Panel Support
3	Control Panel
4	Screw
5	Spacer
7	Rapid Pin
8	Nut

ITEM	PART NO.	DESCRIPTION
6	85008920	Computer Board
10	85008965	Cover w/Weight Tray
12	85008966	Base Plate

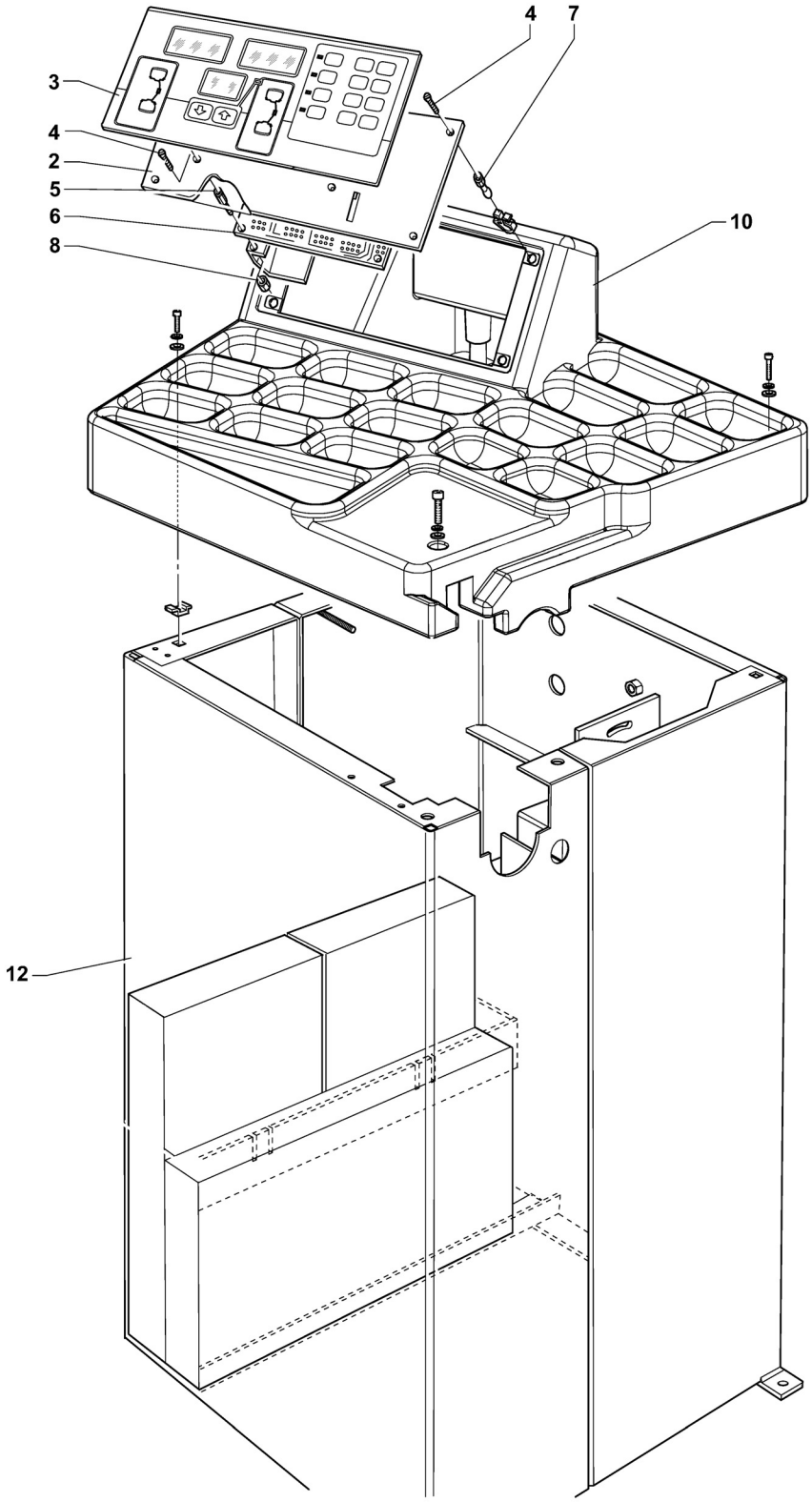

Touch Panel Assembly (775)

ITEM	PART NO.	DESCRIPTION
1	85008948	Touch Panel Assembly
3	85008909	Computer Board
10	85008912	Fuse

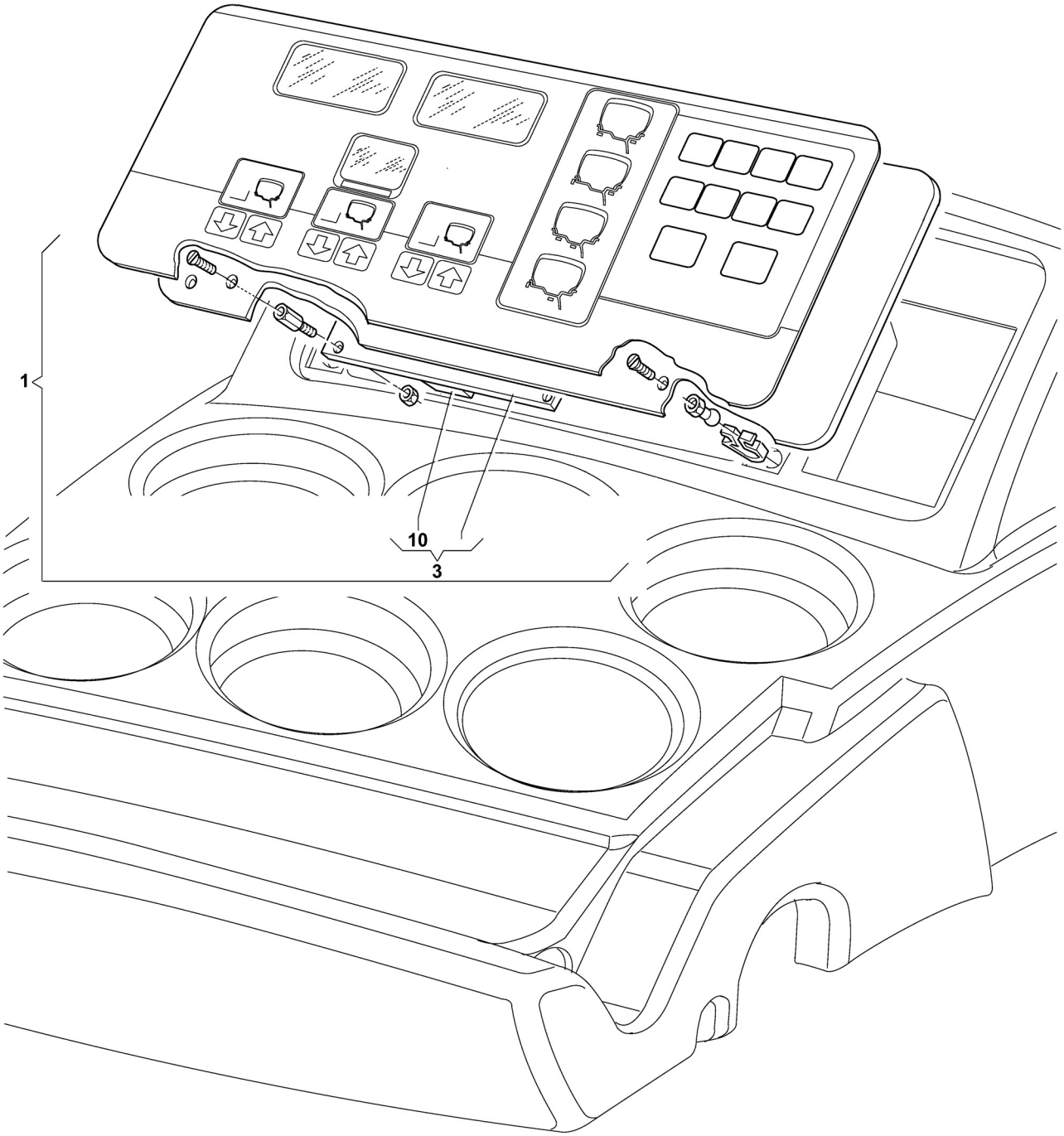

Chassis Assembly (775)

ITEM	PART NO.	DESCRIPTION
1	85008955	Cover with Weight Tray
2	85008956	Rear Casing
3	85009957	Plug
5	85008958	Casing
6	85008959	Front Casing

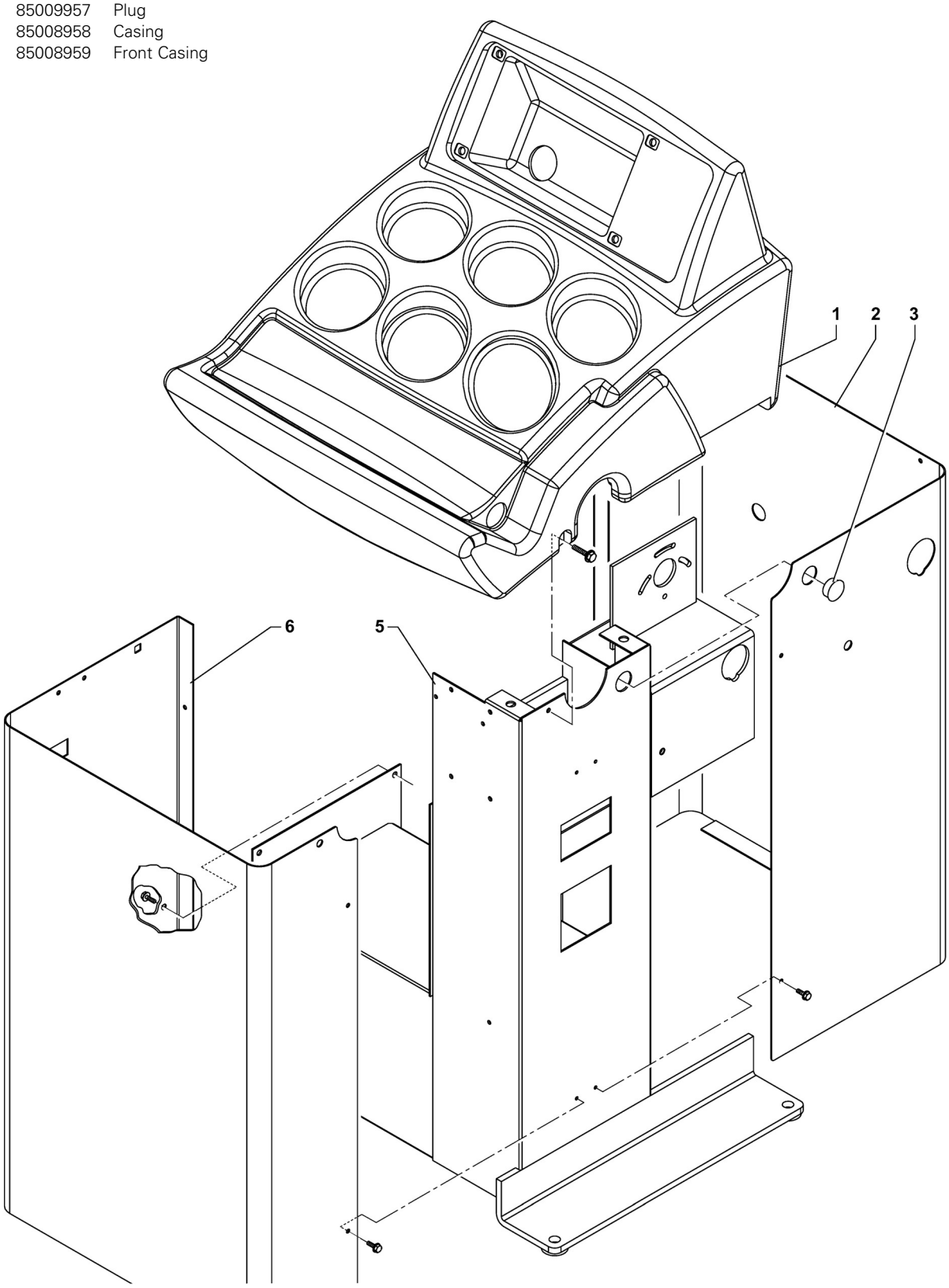

Distance Guage (875)

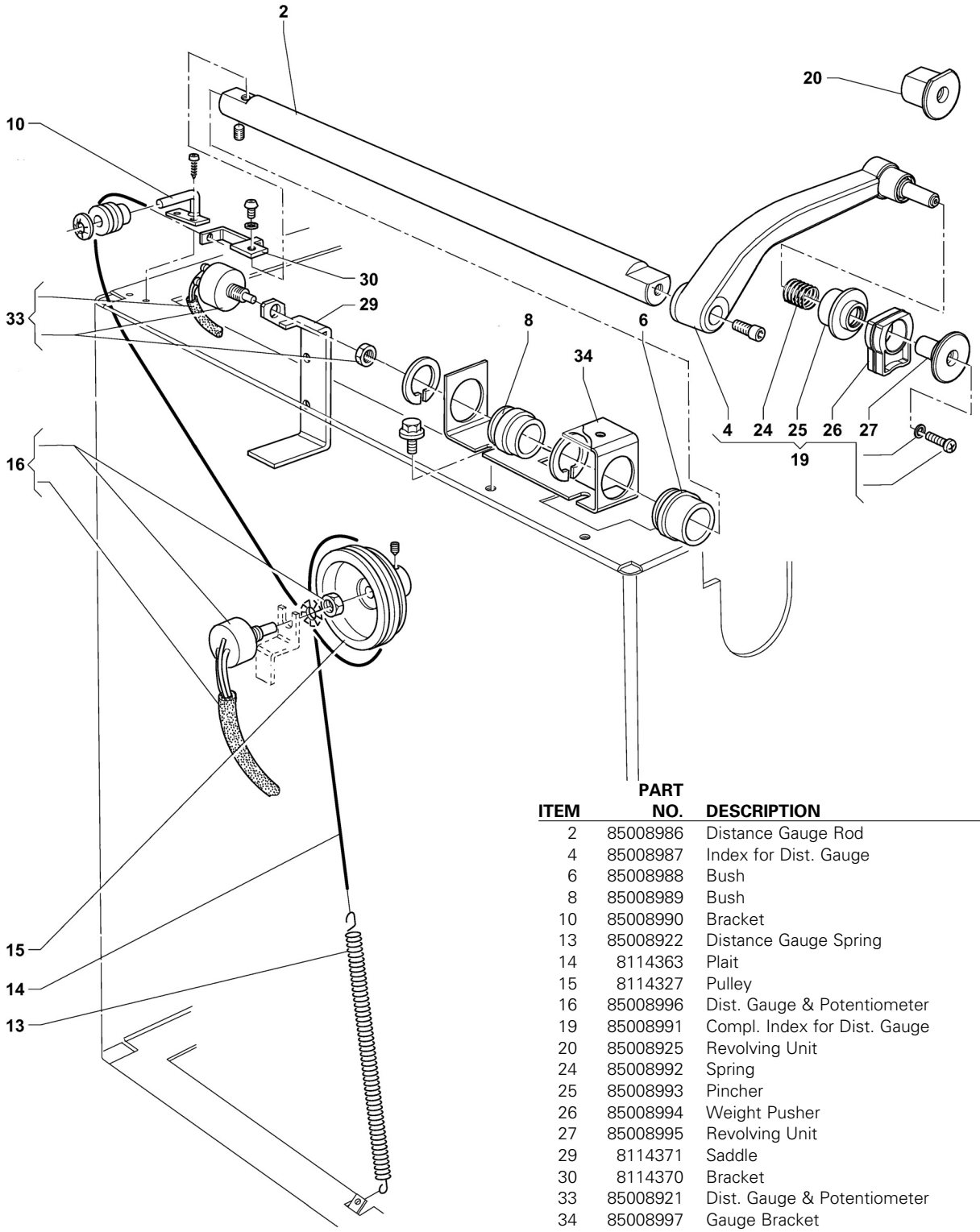

ITEM	PART NO.	DESCRIPTION
2	85008986	Distance Gauge Rod
4	85008987	Index for Dist. Gauge
6	85008988	Bush
8	85008989	Bush
10	85008990	Bracket
13	85008922	Distance Gauge Spring
14	8114363	Plait
15	8114327	Pulley
16	85008996	Dist. Gauge & Potentiometer
19	85008991	Compl. Index for Dist. Gauge
20	85008925	Revolving Unit
24	85008992	Spring
25	85008993	Pincher
26	85008994	Weight Pusher
27	85008995	Revolving Unit
29	8114371	Saddle
30	8114370	Bracket
33	85008921	Dist. Gauge & Potentiometer
34	85008997	Gauge Bracket

Distance Guage (775)

ITEM	PART NO.	DESCRIPTION
1	85008906	Distance Gauge Spring
2	85008952	Distance Gauge Rod
3	85008960	Elastic Dowel
4	85008961	Gauge Bracket
5	85008962	Graduated Band
8	85008963	Index for Distance Gauge

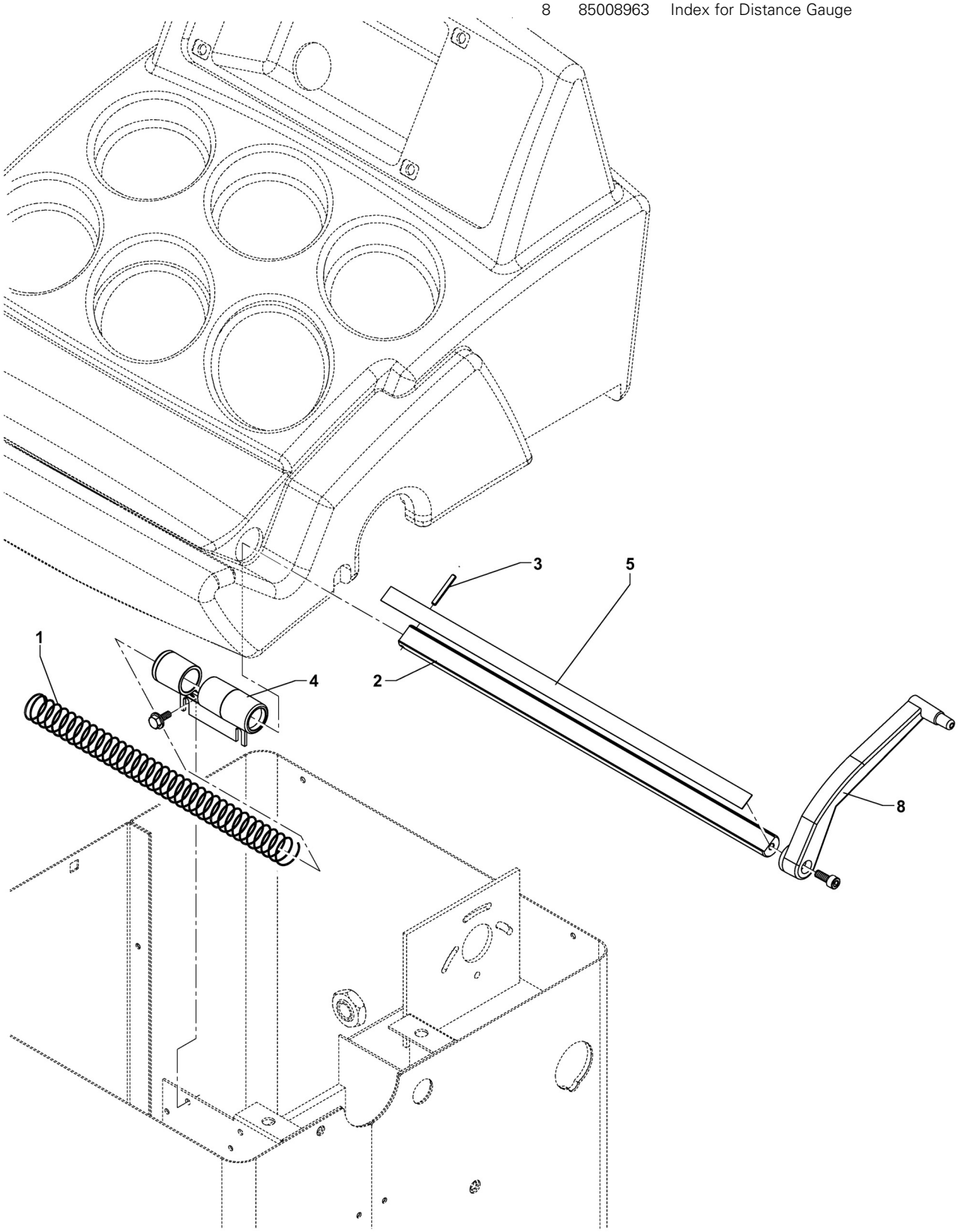

Power Panel (875)

ITEM	PART NO.	DESCRIPTION
1	85008907	Platform Switch
2	85008998	Spacer
3	85008999	Power Plate Kit
4	85009000	Electric Plate
6	85008917	Power Supply Board 230V
8	85008918	Capacitor 230V
9	85009001	Cable Circlip
*	85008947	RC Filter/Snubber

*Not Shown

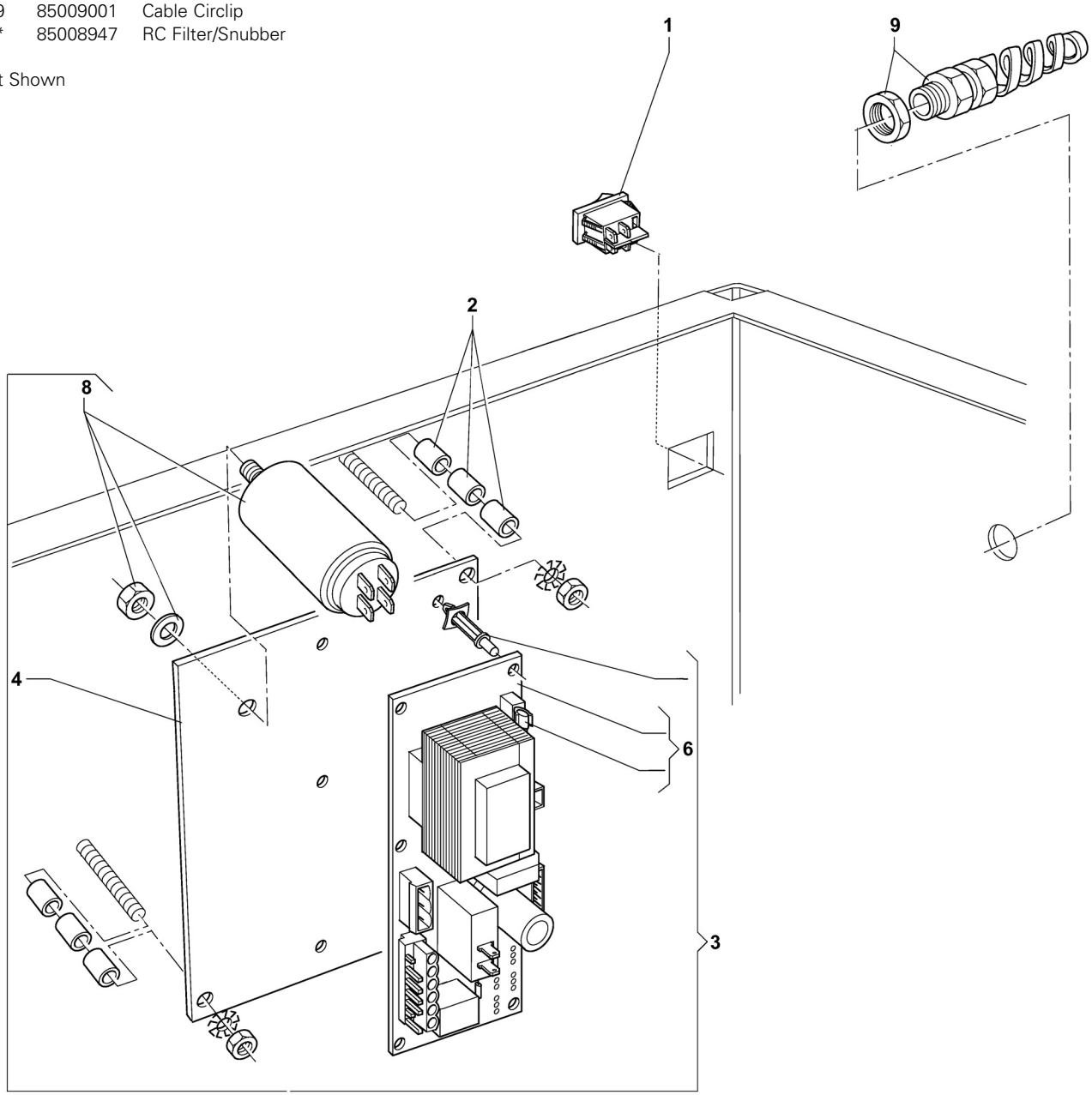

Power Panel (775)

ITEM	PART NO.	DESCRIPTION
1	85008907	Platform Switch
3	85008916	Power Plate Kit, 115V
6	85008917	Power Supply Board, 115V
7	85008918	Capacitor, 115V Assembly
11	85009001	Knurled Washer
*	85008947	RC Filter/Snubber

*Not Shown

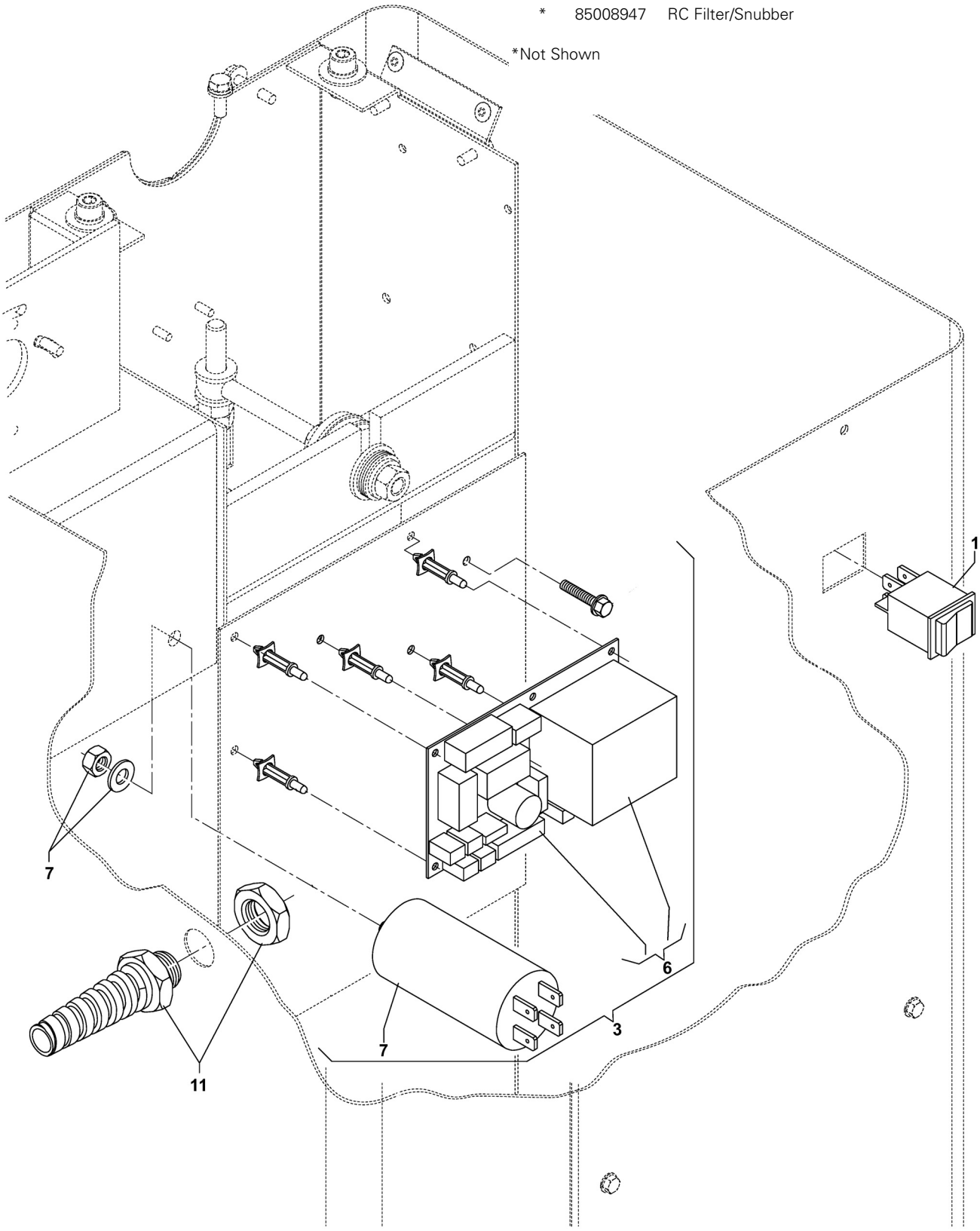

Wheel Guard

ITEM	DESCRIPTION
P/N	***85008954 Wheel Guard***
8	Wheel Guard
9	Self-threading Screw
11	Tube Chassis

ITEM	PART NO.	DESCRIPTION
1	85008968	Plug
3	85008967	Stop Ring
4	85009024	Bush
5	85008969	Support
10	85008971	Spring
16	85008911	Cable w/microswitch
17	85008972	Microswitch

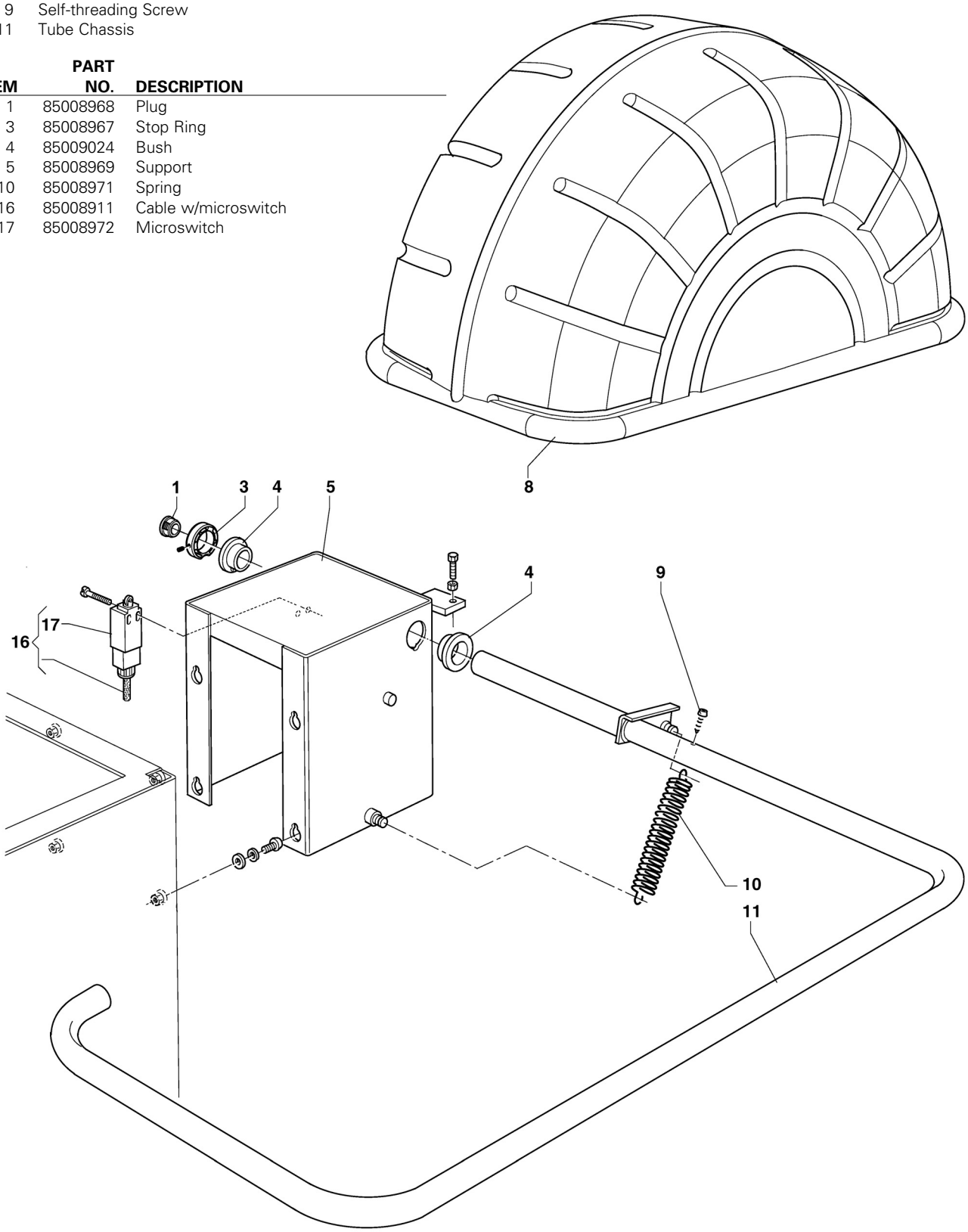

Harnesses

ITEM	PART NO.	DESCRIPTION
*	85008908	Hood Switch Harness
*	85008919	Encoder Cable
*	85008923	Display Power Ribbon
*	85008926	Ground Cable For Display
*	85009006	Power Cord from Wall, (775, 875)
*	85009008	Cord from Switch to MCB
*	85009025	Piezo/Display Cable

*Not Shown

Notes

Notes

85008895 00 11/07 © Copyright 2007 Hennessy Industries and COATS® All Rights Reserved Printed in USA