RC-45 A/E, RC-55 A/E

Rim Clamp® Tire Changers

For servicing single piece automotive and most light truck tire/wheel assemblies.

Model RC-45

Model RC-55

Parts Identification

READ these instructions before placing unit in service. KEEP these and other materials delivered with the unit in a binder near the machine for ease of reference by supervisors and operators.

HENNESSY INDUSTRIES
1601 J. P. Hennessy Drive, LaVergne, TN USA 37086 615/641-7533 800/688/6359 www.coatsgarage.com
HENNESSY INDUSTRIES INC. Manufacturer of AMMCO®, COATS® and BADA® Automotive Service Equipment and Tools.
Manual Part No.: 85609954 18
Revision: 04/19

Parts Identification

The following pages include parts breakdowns with exploded view illustrations to help with ordering replacement or spare kits. Assemblies are noted where it is recommended that individual parts not be ordered separately. Note that the parts view illustrations are for multiple models and not all parts shown are on all models. Every effort is made to supply accurate exploded views, however, due to interim changes in manufacturing operations, some units may not be exactly as illustrated.

Table of Contents

Parts Identification **2**
Chassis System **4**
BL Arm Assembly **5**
Inflation Bracket and Tower Assembly **6**
Swing Arm Assembly **8**
Foot Pedal Assemblies **10**
Electric Model Foot Pedal Assembly 10
Air Model Foot Pedal Assembly 11
Table Top and Shaft Housing Assembly **12**
Robo-Arm® LR Assembly **14**
Valve Assemblies **16**
Cylinder Assemblies **17**
Electrical Schematic **18**
Pneumatic Diagram **19**
Rim Clamp® Tire Changer **20**

Chassis System

Item	Part No.	Description
3	8106301	1/4" Hex Hd Self Tap Screw, Gr.5
5	8182811	Inflation Pedal Cover
6	85609786	Inflation Pedal Decal
7	85607585	Metal Side Panel
8	8182040	M10-1.5 x 55MM Hex Hd.Cap Scr, Gr.8.8
9	8301032	3/8 Flat Washer, Zinc Plate
10	8107715	3/8-16 x 1-1/4 Hex Hd. Cap Scr, Gr.5
12	85611044C2	Lubricator Bracket
13	8183778	Lubrication Notice Decal
14	85608582	3/4 x 3-1/2 SHSHS Screw
16	8182016	3/4-10/E23 Nylon Hex Nut
17	8182041	Chassis
18	8181851	B.L. Pad, Front
19	8182088	5/16-18 x 1-1/4 TPHST Screw, Gr.5
20	8181855	B.L. Center Pad
**21	8181354	Bead Lifting Tool
**22	85000783	Lift Tool Bootie Kit, Pkg of 10
23	924724	312-18 Hex Flange Nut
24	856104041	Tank Reservoir w/Cap
25	8561040601	Tank Reservoir Cap
26	8183452	5/16-18x5/8 HWHCS Screw
27	85609766	Water Separator Assy (Air Motor Machines Only)

**Accessory Item

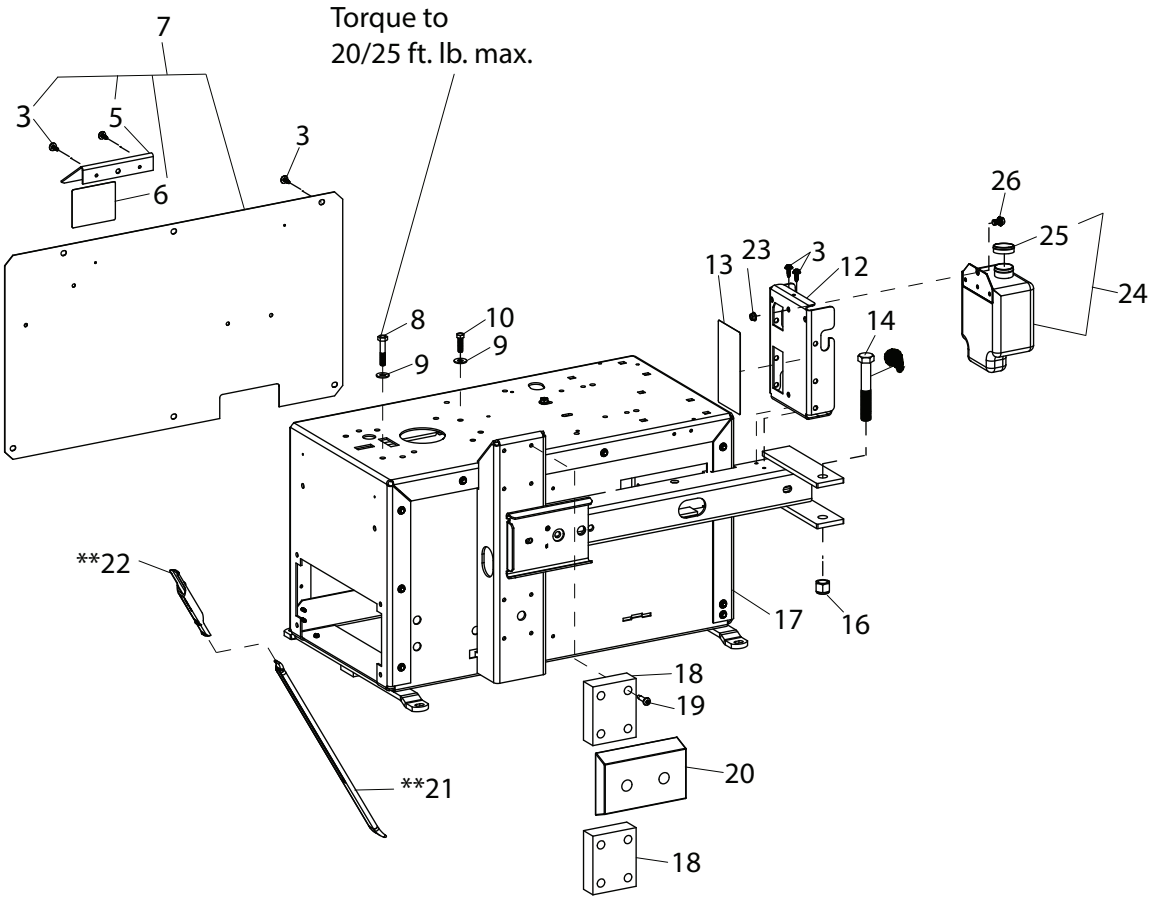

APPLY GREASE TO THESE LOCATIONS

BL Arm Assembly

Item	Part No.	Description
†1	8183312	B.L. Cylinder, 3/8″ Fitting (Foot Operated)
2	8181949	5/8 x 1-3/8 Clevis Pin
3	8181912	Clevis Clip
4	8182016	3/4"-10 Nylon Insert Lock Nut, Gr.5
**5	8183606	Shoe Bootie Kit, Pkg of 2
6	8183529	B.L. Shoe, w/handle (Foot Operated)
7	8182043	5/8-11 Nylon Insert Lock Nut Gr.5
8	8181951	B.L. Shoe Pivot Bracket
9	7000230	1/2″ Rubber Hand Grip (Foot Operated)
10	8182011	5/8-11 x 5" Hex Hd Cap Scr, Gr.5
13	8182009	3/4-10 x 3 3/4" HHCS
14	8120326	ø1/2" Hitch Pin
15	8180230	B.L. Spring
16	8182550	Pivot Pin, B.L. Cylinder Rod (Foot Operated)
17	8181970	Bead Loosener Caution Decal
18	8182768	Bead Loosener Caution Decal
	8182768FR	Bead Loosener Caution Decal, French
19	8182002	B.L. Arm

†Cylinder Assemblies (see page 17)
**Accessory Item

BL Arm Assembly (Foot Operated)

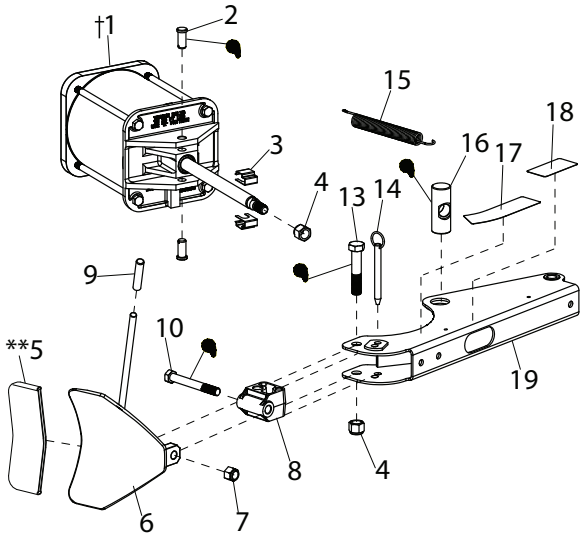

BL Arm Assembly (Hand Operated)

Inflation Bracket and Tower Assembly

Item	Part No.	Description
1	8181933	Pedal Inflation
2	8102459	3/8" Self Tap Screw Gr.5
3	8107407	Hitch Pin Retainer
4	8104613	5/8" Ext. Tooth Lock Washer
5	8104611	5/8" N.F. Jam Nut Gr.5
6	8104610	3/4" N.F. Jam Nut Gr.5
7	8104612	3/4" Ext. Tooth Lock Washer
8	8181932	Inflation Brkt.
9	8180103	3/8 x 3-1/4 Clevis Pin
10	8104674	Bushing (3/4" Valve)
11	8106298	3/4" Valve Ported 1/4"-18 NPT
12	8143169	1/4-20 Whiz Lock Nut, Gr.5
13	8104600	1/4" Valve Comp.
14	8104673	Bushing (1/4" Valve)
15	8120408	1/4-20 x 1-3/4 H.H. Cap Scr., Gr.5
16	8120424	3/8"-16 Wash Hd. Lock Nut Gr.5
17	8182076	Shim Kit
18	85000816	Pressure Limiter
19	8000240	Washer 1" OD x 13/32 ID x 3/16"
20	8107715	3/8-16 x 1-1/4 Hex Hd. Cap Scr, Gr.8.8
21	8106303	3/8" Whiz Lock Nut, Gr.5
22	8106302	3/8" Whiz Lock Screw, Gr.5
23	8101018	0.392 x 0.687 x 0.0478 Washer
24	8181137	3/8-16 x 2-1/4 Hex Hd.Cap Scr, Gr.5
25	8182373	Warning Decal
	8182373FR	Warning Decal, French

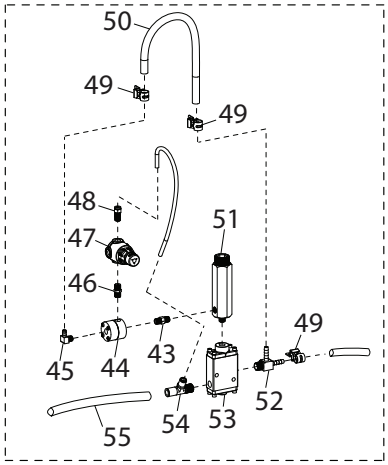

18 Pressure Limiter Assembly

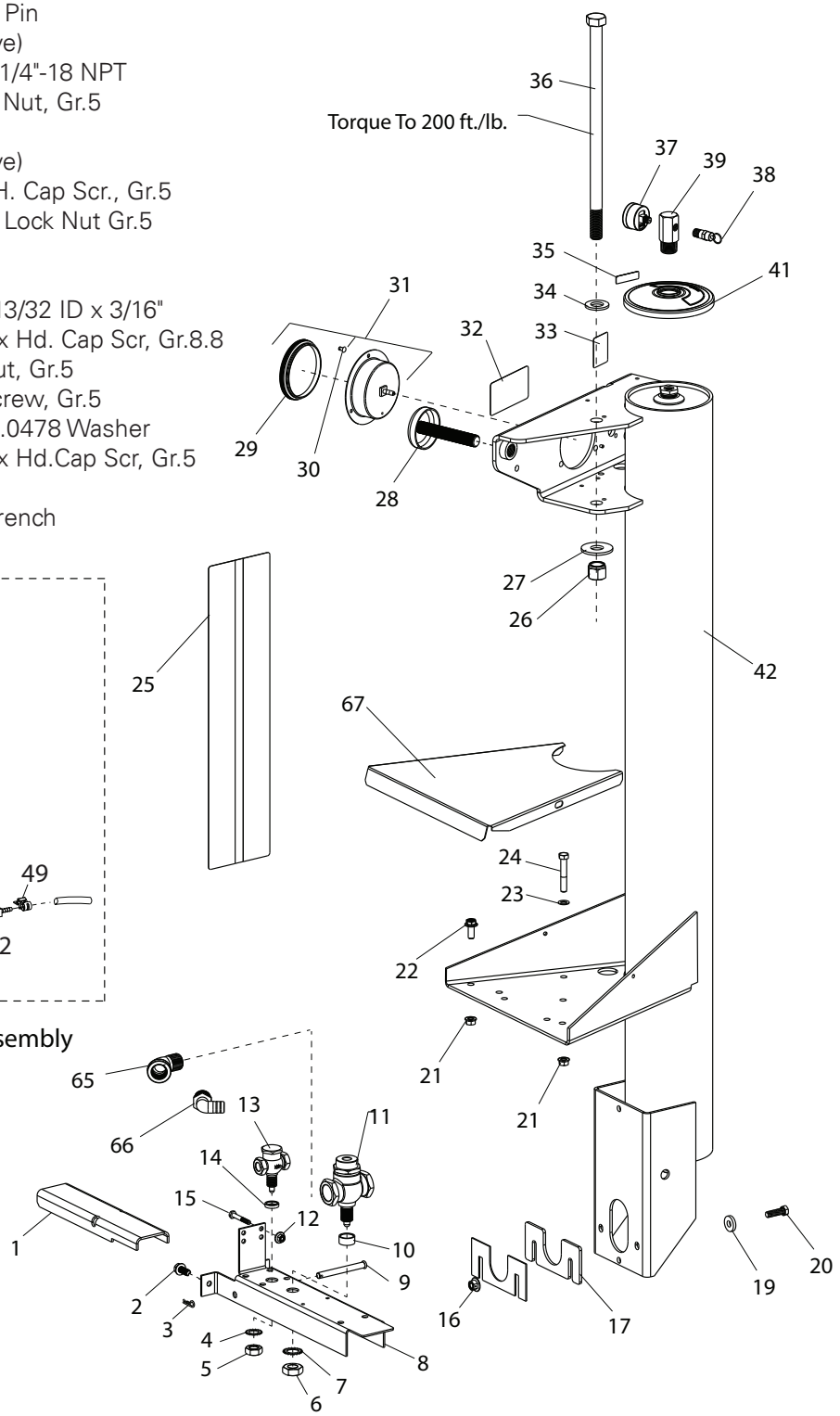

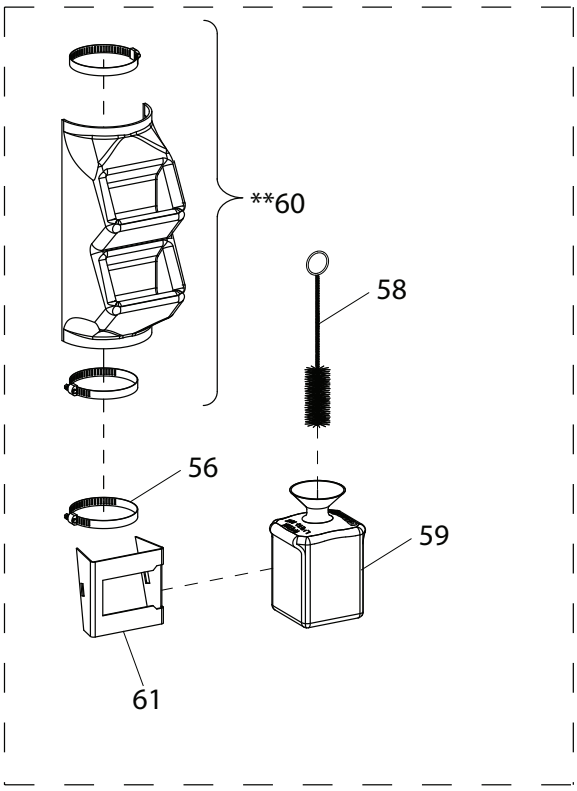

Item	Part No.	Description
26	8182016	3/4"-10 Nylon Insert Lock Nut, Gr.5
27	8100994	3/4 Flat Washer
28	8182593	Adjusting Knob Assy
29	8107517	Gauge Lens, Screw On
30	8107983	Plastic Fastener
31	85610709	Flanged Air Gauge w/Fasteners
32	8109888	Inflation Warning Decal
33	8183597	Release Valve Decal
34	8182457	3/4" SAE Washer
35	8182059	Line Pressure Gauge Decal
36	8181172	3/4-10 x 7-1/2" Hex Hd. Cap Scr, Gr.5 (RC-45)
	8183635	3/4-10 x 14-1/2" Hex Hd. Cap Scr, Gr.5 (RC-55)
37	8108968	Air Gauge
38	8182599	Safety Valve
39	8109784	Manifold/Gauge (RC-45)
	8183434	Manifold/Gauge (RC-55)
40	8000378	1/4" Brass St. Fitting (RC-55)
41	8182458	Plastic Cap (Tower)
42	8184831	Tower/Air Receiver
43	8109471	1/8" Brass Hex Nipple
44	8109468	Pressure Repeater
45	8110497	Male Elbow 1/8 NPT x 1/4 Hose
46	8109472	1/8" Inline Filter
47	8111083	Regulator
48	8182035	1/8 NPT x 1/4 Tube Male St. Fit.
49	85606362	13mm Spring Hose Clamp
50	8103649	ø1/4 x 12" Hose
51	8110496	Volumn Chamber
52	8110325	1/4" NPT Male Run Tee
53	8109466	Piloted Valve
54	8111255	1/4 NPT x 3/8 x 1/4 Spl Tee
55	8184459	3/8 x 25" Black Rubber Hose
56	8182221	6" Hose Clamp
58	8000491	Lube Applicator
59	8106259	Lube Bottle (Red)
60	8181554	Accessory Tray Kit
61	8182809	Lube Bottle Brkt-Red
67	8182805	Tower Support Cover

**Accessory Item

Swing Arm Assembly

Item	Part No.	Description
1	8183151	5/16-18 x 0.75 SBHCS, Gr.8
2	8181771	Vertical Slide Knob
3	8182028	Vertical Slide Spring
4	8182339	Swing Arm Shim Kit
5	8181038	Swing Arm Pivot Pin
6	818483002	Swing Arm, for R.H. Cam Lock
7	8100979	Handle Grip, Black Flex 3/4 I.D.
8	8183673	Lock Handle/Lift Cam W/C, R.H.
9	8181095	1-5/8 Snap Ring
10	8182371	1-5/8 Dia. Wave Washer
11	8181113	1/2"-13 Jam Nut, Gr. 5
12	85606343	Lock Plate
13	8181035	Lock Plate Lift Pin
14	8182767	Vertical Slide Shaft
15	8182031	Rubber Bumper
16	85606344	1/2 x 5/8 Shoulder Screw
17	8182813	3/8-16 x 3/4" Ctr Bore Cap Scr, Gr.8
18	8182027	7 ga. x .406 ID x 1.28 OD Washer
19	8106302	3/8" Whiz Lock Screw, Gr.5
20	8140667	1/4-20 x 1/4 Soc.Hd.Set Scr, Gr.8
21	8182786	5MM x 25MM Dowel Pin
22	8182787	0.562 Diameter x 0.515 LG. Roller
23	8182788	Duckhead® Mount/Demount Tool Kit (Metal)
24	85610655	3/8-16 Lock Nut
25	8183061	Duckhead Mount/Demount Tool Kit (Nylon)
26	85607803	Roller Mount
27	85606462	Bead Roller (Duckhead) Pkg.
28	8184432	Duckhead Mount/Demount Tool Kit (Grey)
29	8183055	3/8-16 x 0.750 SBHCS Screw
36	85608961	Hybrid Duckhead Tail
37	85608959	Hybrid Duckhead Mount/Demount Tool Lever Type
38	8184600	Manual Bead Depressor
39	85608958	0.25 x 1.50 Dowel Pin

**Accessory Item

Swing Arm Assembly

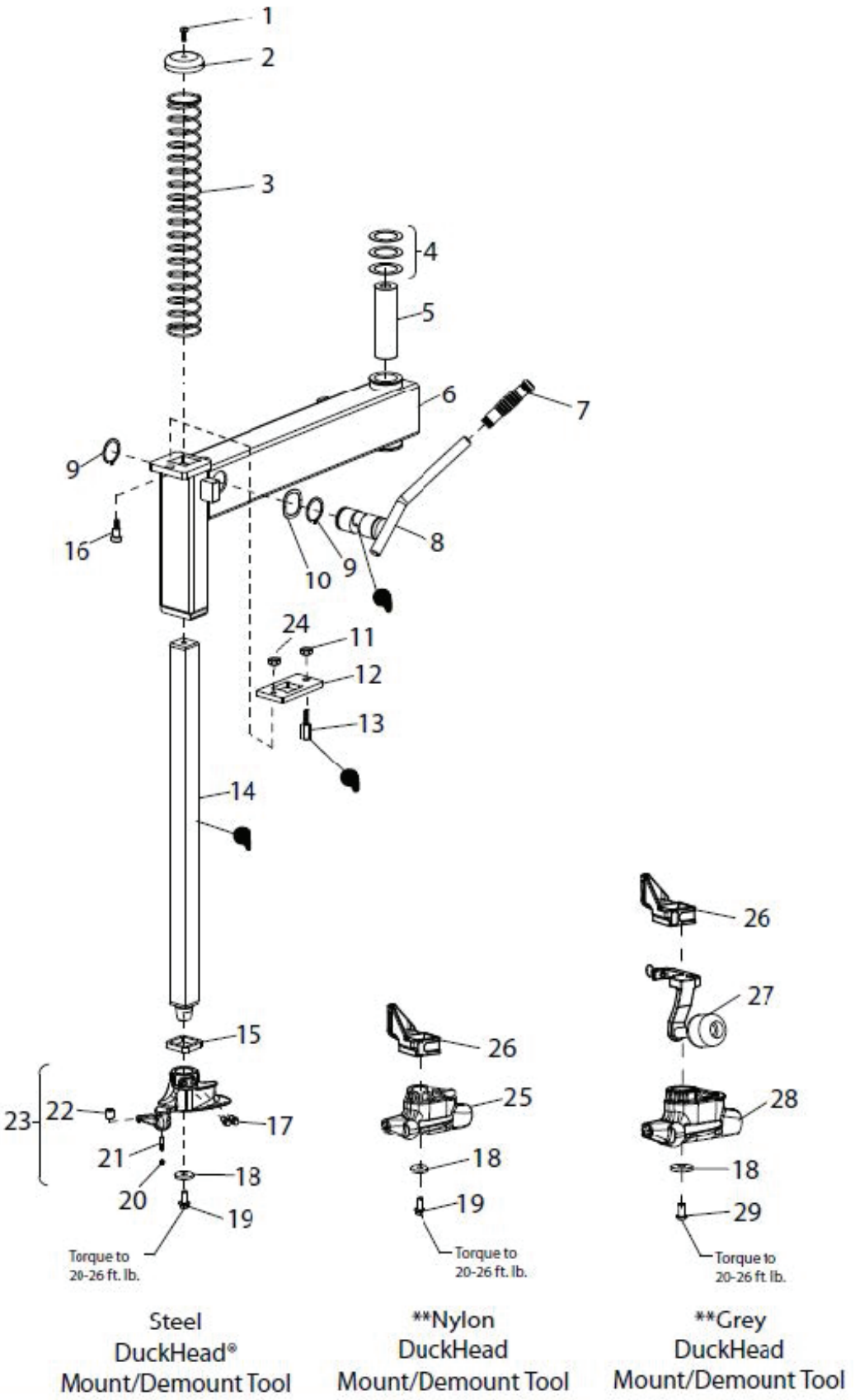

APPLY GREASE TO THESE LOCATIONS

Foot Pedal Assemblies

Electric Model Foot Pedal Assembly

Item	Part No.	Description
1	8103737	Release Valve
2	8104945	1/4 x 1 HWHSTC, Gr.5
3	8106301	1/4" Hex Hd Self Tap Screw, Gr.5
4	8107635	5/16" Flat Washer
5	8107419	Hair Pin Cotter
6	8120469	Hair Pin Cotter
7	8181369	1/4-20 Lock Nut, Nyl. Ins. Gr.5
8	8181675	Standard Pedal
9	8181699	Lever Assembly - Switch
10	8181707	Torsion Spring
11	8181708	Pedal Extension Spring
12	8181728	Switch Actuator Lever
13	8181872	Torsion Spring Sleeve
14	8181911	Pedal Spacer
15	8181918	Valve Brkt. Spacer Bar
16	8181923	Stop Washer
17	8181948	1/2" Nylinder Bearing
18	8181959	Cover-Switch
19	8181977	3/16" x 1-1/2" Clevis Pin
21	8181982	3mm x 0.5 x 12mm Lg HHCS Screw
22	8181984	1/4-20 x 1" Hx.Hd.Cp.Scr., Gr.5
23	8181989	10-24 x 3/8 SHCS, Gr.8
24	8182327	Pedal Spacer
25	8182332	Guard-Foot Pedal
26	8182363	Spacer - Sw Pedal Lever-Red
*27	8182588	Valve Assembly
*28	85600262	Valve Assembly
29	8182670	Spring Stop Bracket
30	8182682	10-24 Nylon Insert Lock Nut Gr.5
31	8182743	10-24 x 3/8 SHCSS Gr.8
32	8182958	Reversing Switch Kit
33	8183031	Switch/Valve Bracket
34	8183398	Pedal Shaft
35	8184675	Oil Injector Assembly
36	8301072	#6 Internal Tooth Lk Washer
37	8301121	Washer
38	85010038	Cam Link Follower
39	8181695	Cam Link Block

***Valve Assemblies (available only as individual components, see page 16)**

**Accessory Item

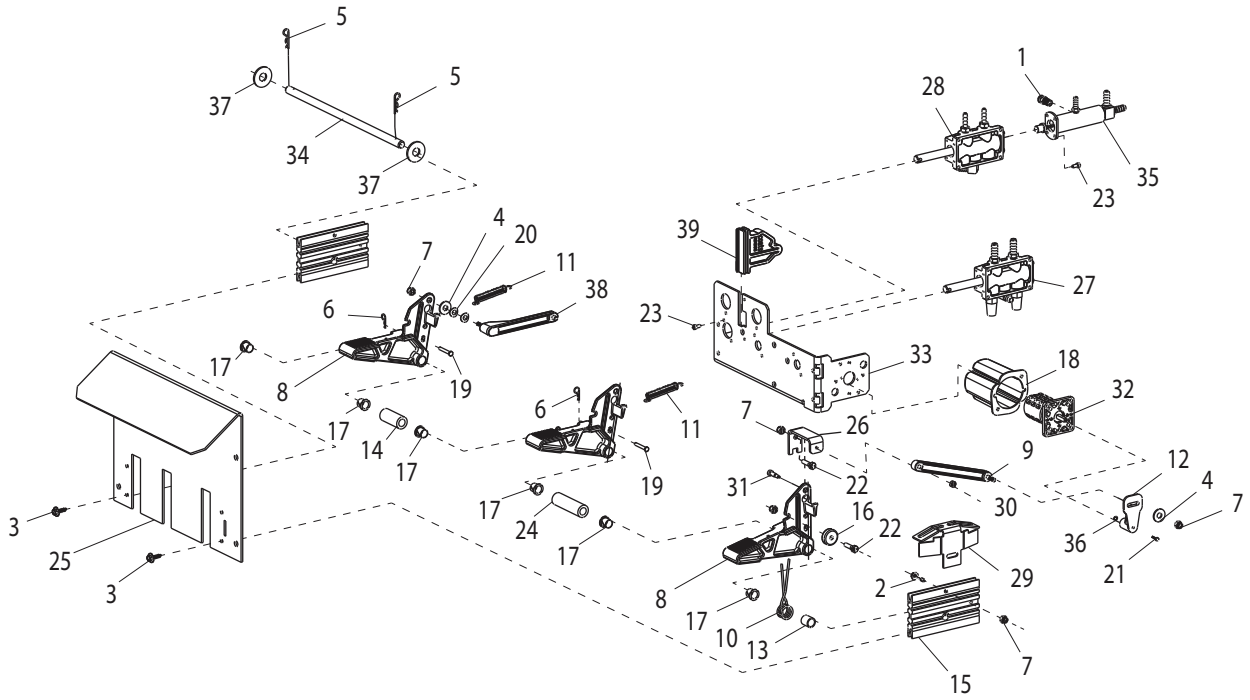

Air Model Foot Pedal Assembly

Item	Part No.	Description
1	8103737	Release Valve
2	8106301	1/4″ Hex Hd Self Tap Screw, Gr.5
3	8106455	Clevis Pin
4	8107635	5/16″ Flat Washer
5	8107419	Hair Pin Cotter
6	8120469	Hair Pin Cotter
7	8181369	1/4-20 Nylok Nut
8	8181675	Standard Pedal
9	8181708	Pedal Extension Spring
10	8181872	Torsion Spring Sleeve
11	8181911	Pedal Spacer
12	8181918	Bar-Valve Brkt. Spacer
13	8181948	1/2" Nylinder Bearing
14	8181977	3/16″ x 1-1/2″ Clevis Pin
15	8181981	5/16″ Wave Washer
16	8181984	1/4-20 x 1″ Hx.Hd.Cp.Scr., Gr.5
17	8181989	10-24 x 3/8 SHCS, Gr.8

Item	Part No.	Description
*36	8182066	Valve Assembly
19	8182327	Pedal Spacer
20	8182332	Foot Pedal Guard
*21	8182588	Valve Assembly
*22	8182589	Valve Assembly
23	8183031	Switch/Valve Bracket
24	8183398	Pedal Shaft
25	8184675	Oil Injector Assembly
26	8301121	Washer
27	85010038	Cam Link Follower
28	85607347	Pedal Spacer
29	85609600	Self Centering Pedal
30	8181695	Cam Mounting Block

***Valve Assemblies (available only as individual components, see page 16)**

**Accessory Item

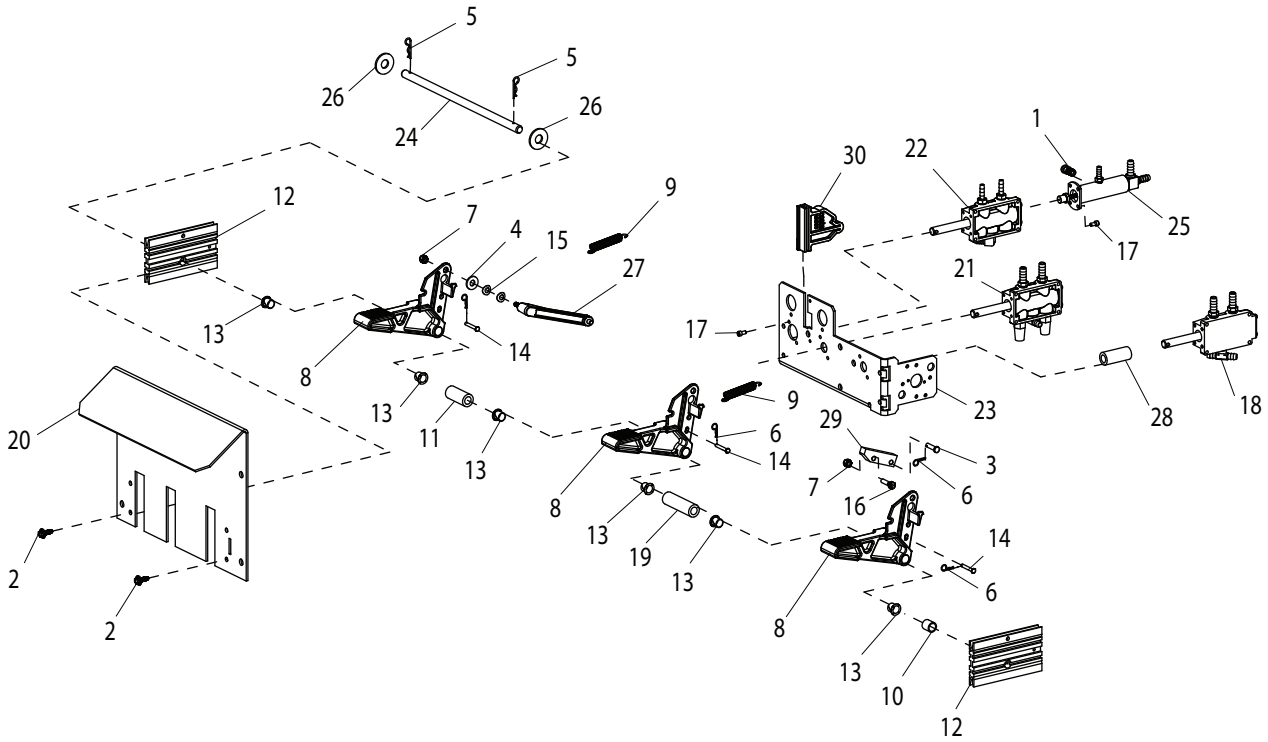

Table Top and Shaft Housing Assembly

Item	Part No.	Description
1	8181929	3/8-16 x 1", Gr.8 Skt. Hd. Cap Scr.
2	8181704	Table Top Plate
6	8182247	Adjustable Rim Clamp
7	8182250	Adj. Clamp Plunger/Spring Assy.
8	8184924	Carrier/Cover - Cylinder End
9	8101039	1/2" Lock Nut, Gr.5
10	8184925	Carrier/Cover - Clamp Adj.
11	85610388	Pivot Link W/C
12	8182279	Adj. Clamp Link Bolt
13	8181731	Table Top Pivot Plate
14	8183476	ø1/4" x 3/4" Roll Pin
15	8181733	Pivot Block
16	85610716	Screw-HHCS, 5/16-18 x 5/8, GR.5
†17	8182613	Table Top Cylinder Assembly
18	8182627	1-5/8" Dia. Cap Plug
19	85611050	Screw-SHCS,M16x40,GR12.9
20	8182979	ø16mm Molded Washer
21	8181990	Spider Assembly
22	85611579	Rotary Coupling Assembly
23	85610108	Cap Plug
24	85610717	Retainer Bracket
25	85607708	Transmission Pulley (4-hole)
26	8140567	1/2-13, Hex. Whiz-lock Nut
27	8183156	ø2" X ø2 3/4" x .010 Washer
28	85608497	Transmission Kit
29	940084	5/16-18 x 1 1/4 Ser. Wash.Hd.Scr.
30	8184674	Motor Pulley
31	85608496	Motor V-Belt, 4L390
32	8182178	5/16-18, Hex. Whiz Lock Nut
33	85609921	Motor Bracket
34	8143044	Tinnerman Sq. Captive Nut 3/8-16
35	8184691	Motor, Electric 115V, 60 Hz, 1 Phase
	8182621	Motor, Electric 220/240V, 50 Hz, 1 Phase
	85000591	Motor, Electric 220V, 60 Hz, 1 Phase
36	8184562	Motor Cable Assy, 4-wire w/plug, 115V, 60 Hz & 220V, 50 Hz
	85000632	Motor Cable Assy, 220V, 60 Hz
37	8181190	Air Motor, Gast. 6AM
38	85606398	Exhaust Valve
39	8181206	1/2" NPT Muffler
**44	8183604	Bootie Kit, Rim Clamp, Pkg of 10
45	85611049	Washer, 5/8 M16 LCKNG PR

†Cylinder Assemblies (see page 17)
**Accessory Item

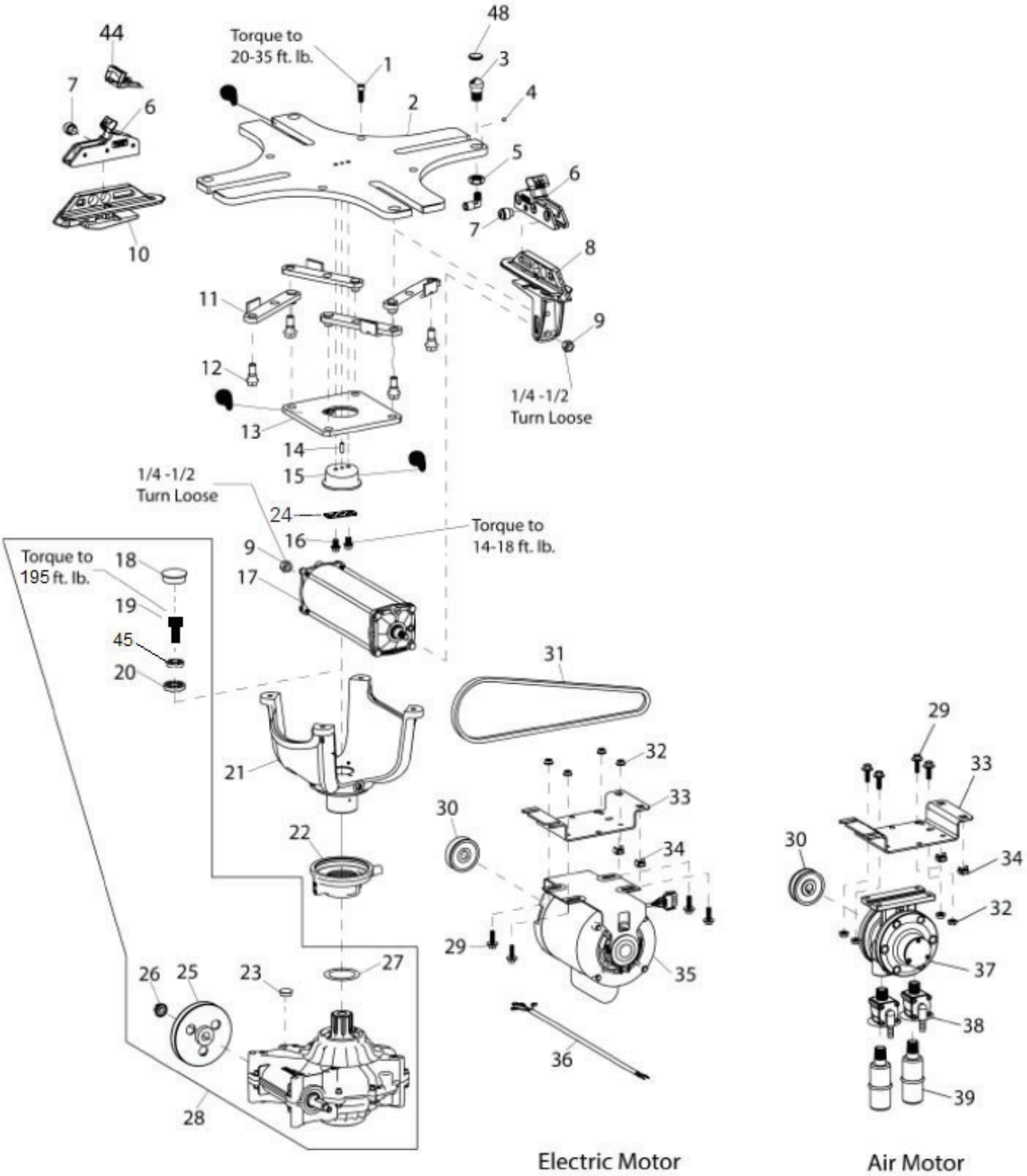

APPLY GREASE TO THESE LOCATIONS

Robo-Arm® LR Assembly

Item	Part No.	Description
1	85607622	Plastic Hold Down Foot
2	905563	Roll Pin, 1/4" Dia x 1-1/2"
3	8301017	Dia. Steel Ball, 1/2"
4	7000230	Rubber Hand Grip, 1/2"
5	8183637	2" Ext. Retaining Ring
6	8182001	Screw, 10-24 x 3/4 Lg. SHCS
7	*8185757	Robo-Arm LR Valve Assembly
8	85607946	Cyl Assem 2" Dia x 8-inch Stroke
9	8181996	1/4 NPT x 1/8 Tube St. Fitting
10	8106301	1/4-20 x 3/4" HWHST Screw
11	8182044	Neoprene Cushion Clamp
12	8183649	1/4-20 x 5/16" Soc Hd Set Screw
13	8184226	1/4-28 Grease Fitting
14	8182016	3/4-10 Hex Nylock Lock Nut
15	8100994	Flat Washer, 3/4"
16	85607618	Front Arm Weldment
17	85607619	Rear Arm Weldment
18	8181038	Swing Arm Pivot Pin
19	8183703	3/4-10 x 10-1/2″ Hex HD Cap Srw
21	8182457	Flat Washer, 3/4 SAE
25	8183635	Screw, 3/4-10 x 14, HHCS, Gr.5
32	8181997	90° Elbow
33	8181038	Pin-Pvt,Arm,Swng
34	†	Hose, Rubber, 1/4, 58" Black
35	†	Plastic Tube, 1/8 x 6"
36	†	Plastic Tube, 1/8 x 16"
37	8183636	Spacer-.781ID X 2.750 OD X 1.5
38		Wire Tie
39	8184059	Manifold Assembly

† Hose Reels

LENGTH	PART NO.	DESCRIPTION
50-ft.	85000375	1/4″ ID x 1/2″ OD Black Rubber Hose
50-ft.	85000376	1/8″ OD x 0.25 Plastic Tube

***Valve Assemblies (available only as individual components, see page 16)**

**Accessory Item

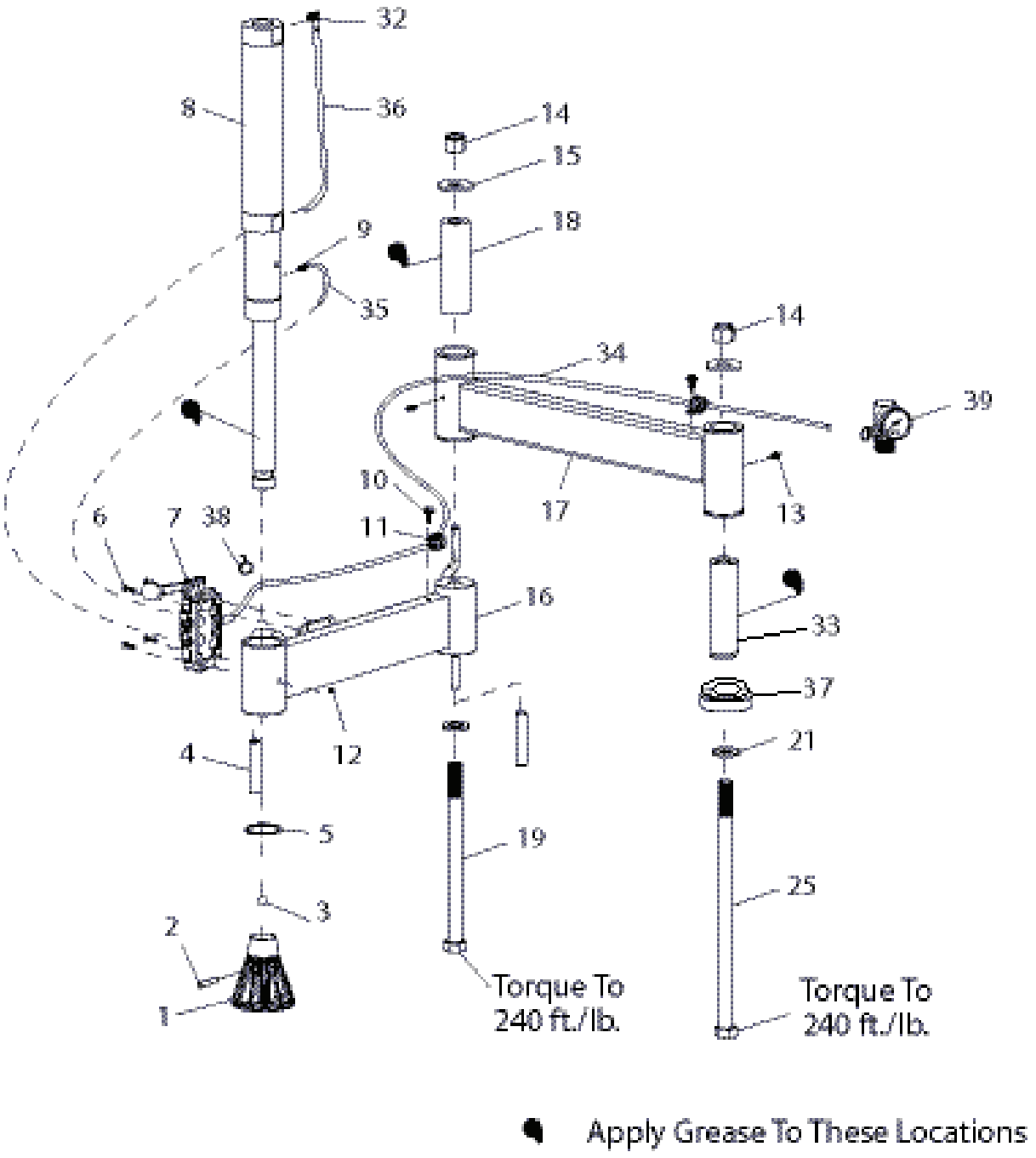
32
8
36
14
15
18
9
35
14
34
39
10
17
13
6
7
38
11
16
33
37
21
4
12
5
19
25
3
2
1
Torque To
240 ft./lb.
Torque To
240 ft./lb.
Apply Grease To These Locations

Valve Assemblies

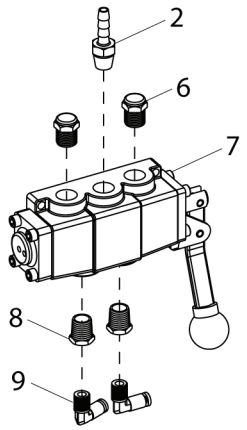

Robo Arm
Valve Assembly

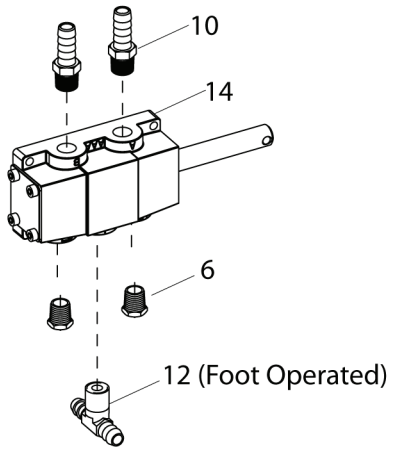

Bead Loosener Arm
Pedal Valve Assembly

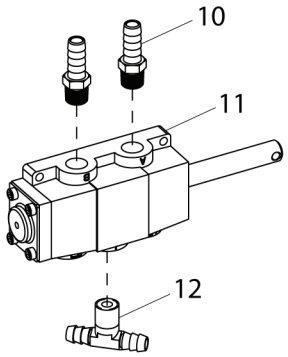

Air Motor Pedal
Valve Assembly

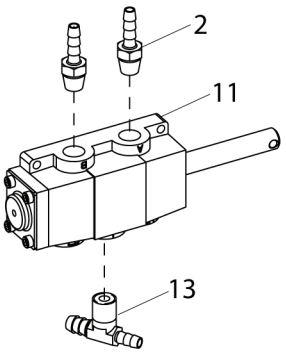

Table Top Clamp
Pedal Valve Assembly

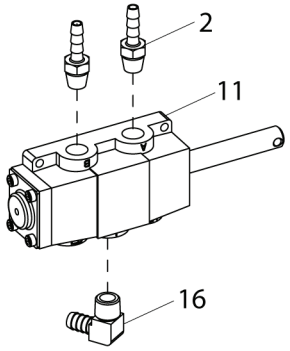

Table Top Clamp
Pedal Valve Assembly

Item	Part No.	Description
2	8000378	1/4″ Brass St. Fitting
6	85607855	Muffler
7	8185585	3 Position Valve
8	8109481	1/4 NPT x 1/8 NPT RDCR Fitting
9	8181997	90° Elbow 1/8 NPT x 1/8″ Fitting
10	8101898	St. 1/4″ NPT 3/8″ Hose Fitting
11	8184369	4-Way w/Pull Pin Valve
12	8184467	1/4″ NPT x 3/8 BRB x 3/8B Tee Fitting
13	8184469	1/4″ NPT x 3/8 BRB x 1/4B Tee Fitting
14	8181986	4-Way w/Pull Pin Valve
16	8184256	1/4 NPT, 1/4 HSE ELL Fitting

Cylinder Assemblies

Item	Part No.	Description
1	8183310	B.L. Cylinder Bottom Cap
2	8182016	3/4"-10 Nylon Insert Nut, Gr.5
3	8181860	B.L. Cylinder Lower Washer
4	8181863	B.L. Cylinder Upper Washer
5	85607881	O-ring
6	8181574	B.L. Cylinder Barrel
7	8183309	B.L. Cylinder Top Cap
8	8181862	Tie Bolt, 1/2-13 x 10-1/4" Lg., Gr.5
9	8182079	Seal Kit, B.L. Cylinder
*10	8184256	ELL 90° 3/8 Hose Fitting - Foot B/L
11	8183311	Piston Rod, All 50 Series & 70 Series w/ Foot B.L.

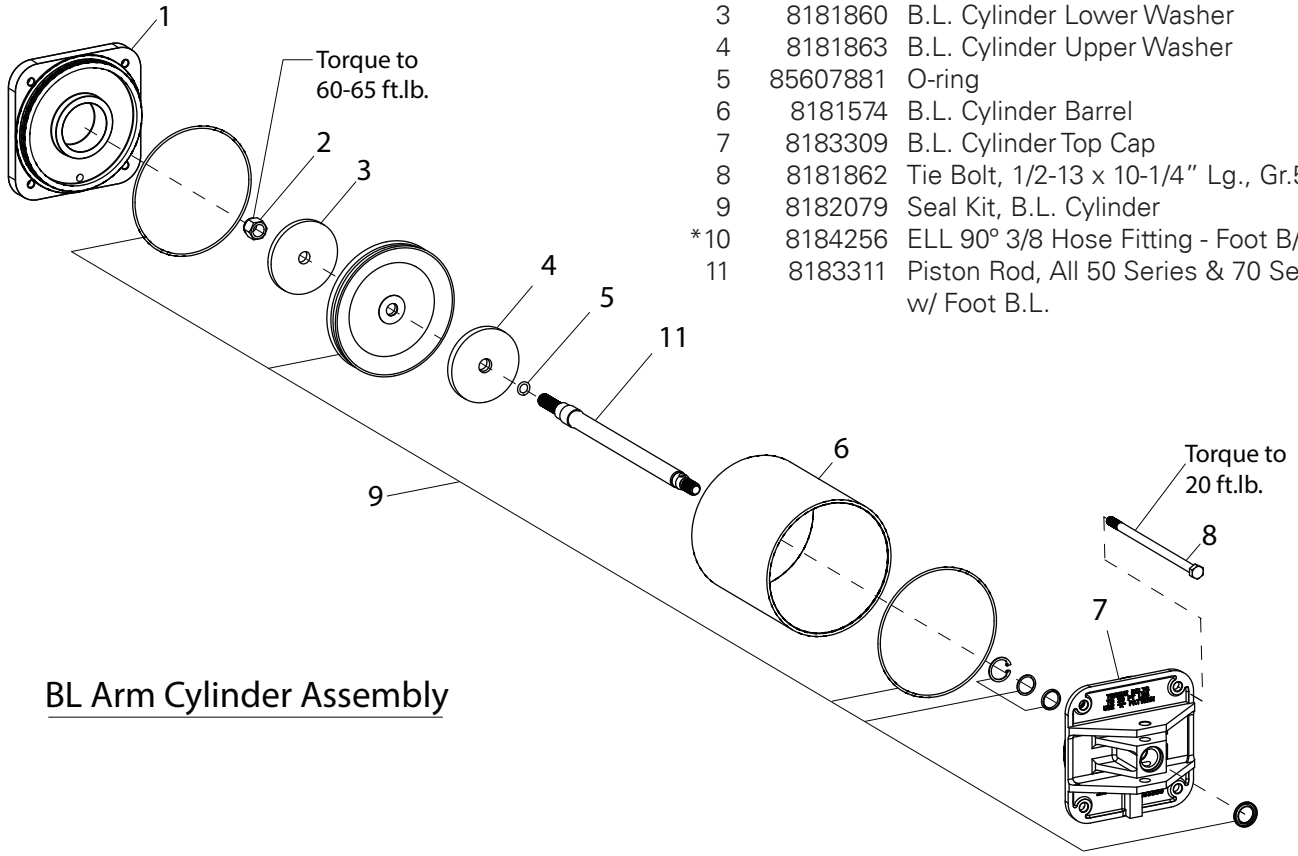

BL Arm Cylinder Assembly

Item	Part No.	Description
1	8181183	5/16-18 Nylon Insert Lock Nut Gr.5
2	8181622	Cylinder Bottom Cap
3	8182719	1/2-13 Locking Jam Nut, Gr.5
4	8183771	1-38 OD x 1/2 ID x 0.062 Washer
5	8181629	Shaft, Tabletop Cyl.
6	8181627	Sleeve, Cylinder
7	8181620	Cylinder Top Cap
8	8181633	Tie Bolt, Tabletop Cylinder
9	8183811	Table Top Cylinder Seal K

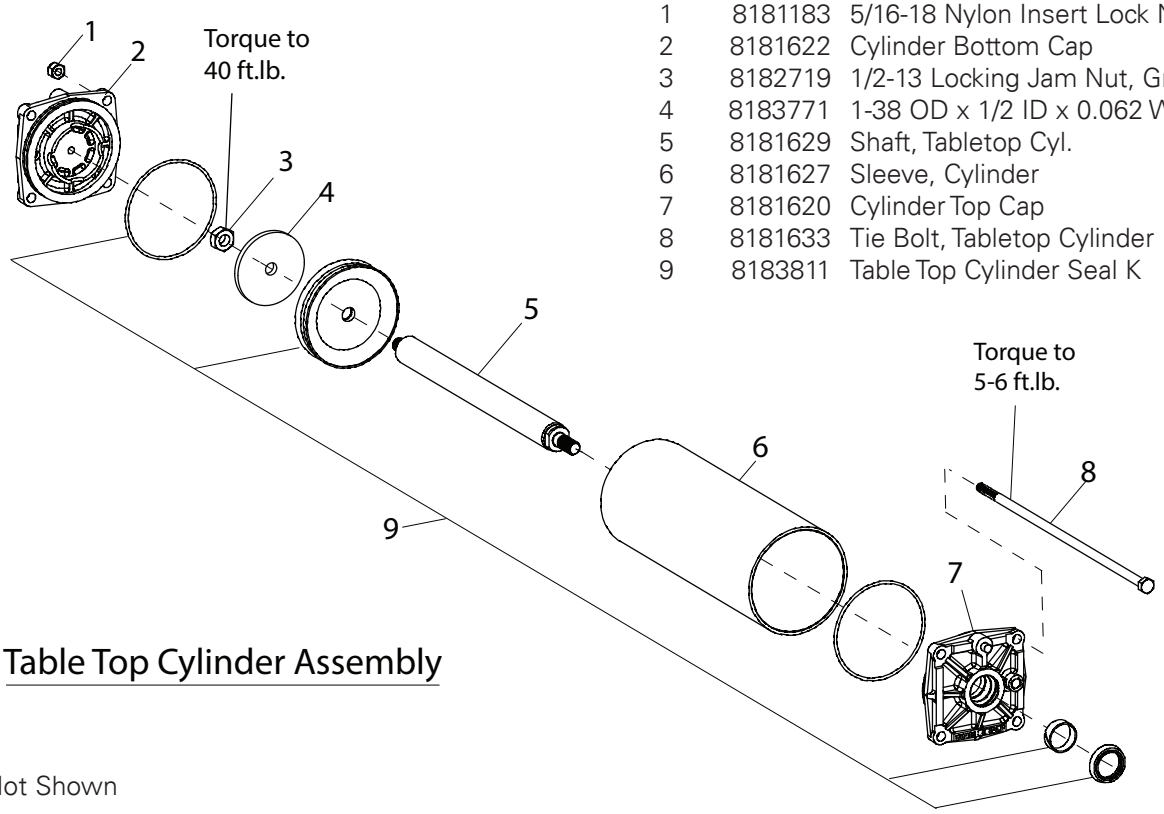

Table Top Cylinder Assembly

*Not Shown

Pneumatic Diagram

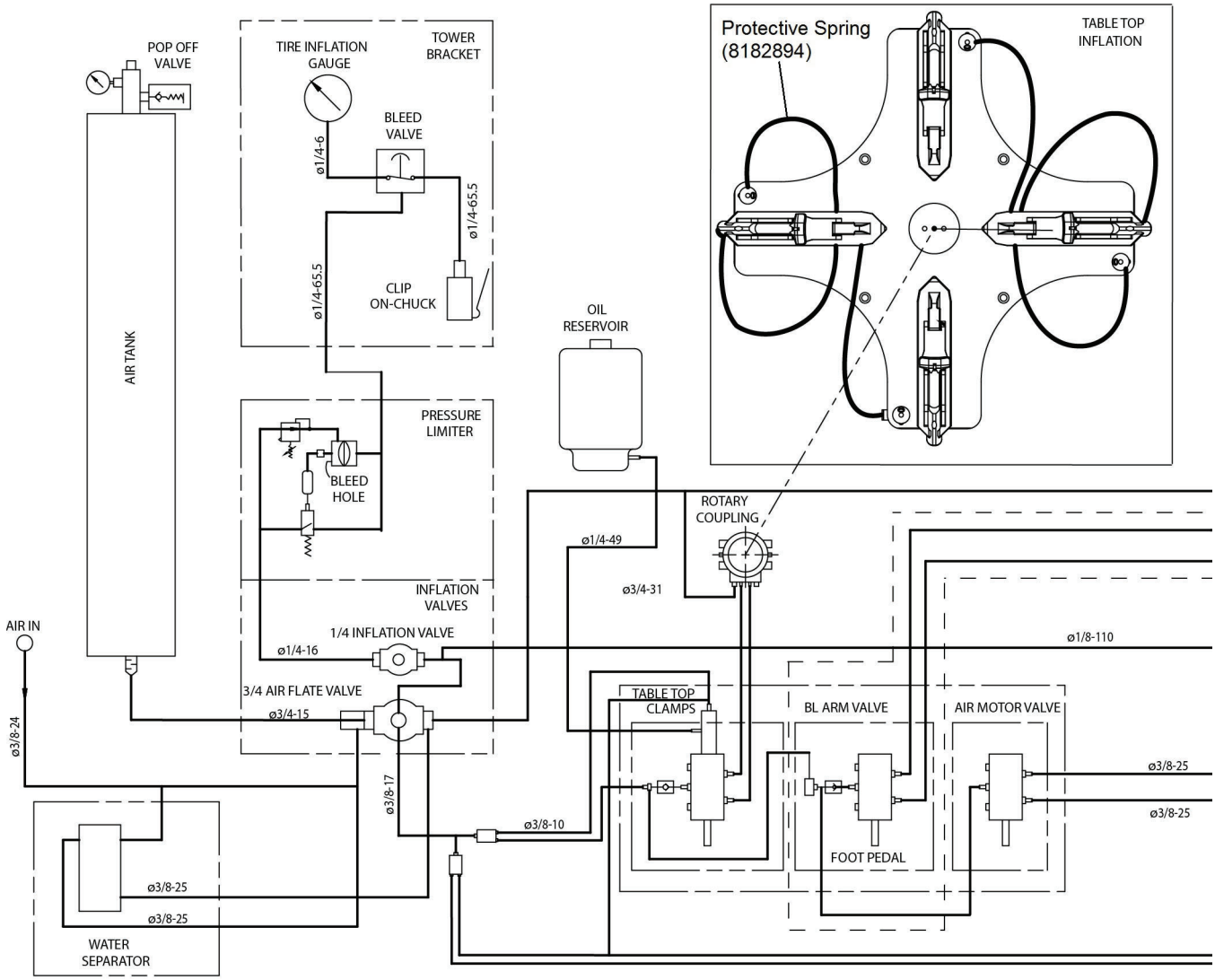

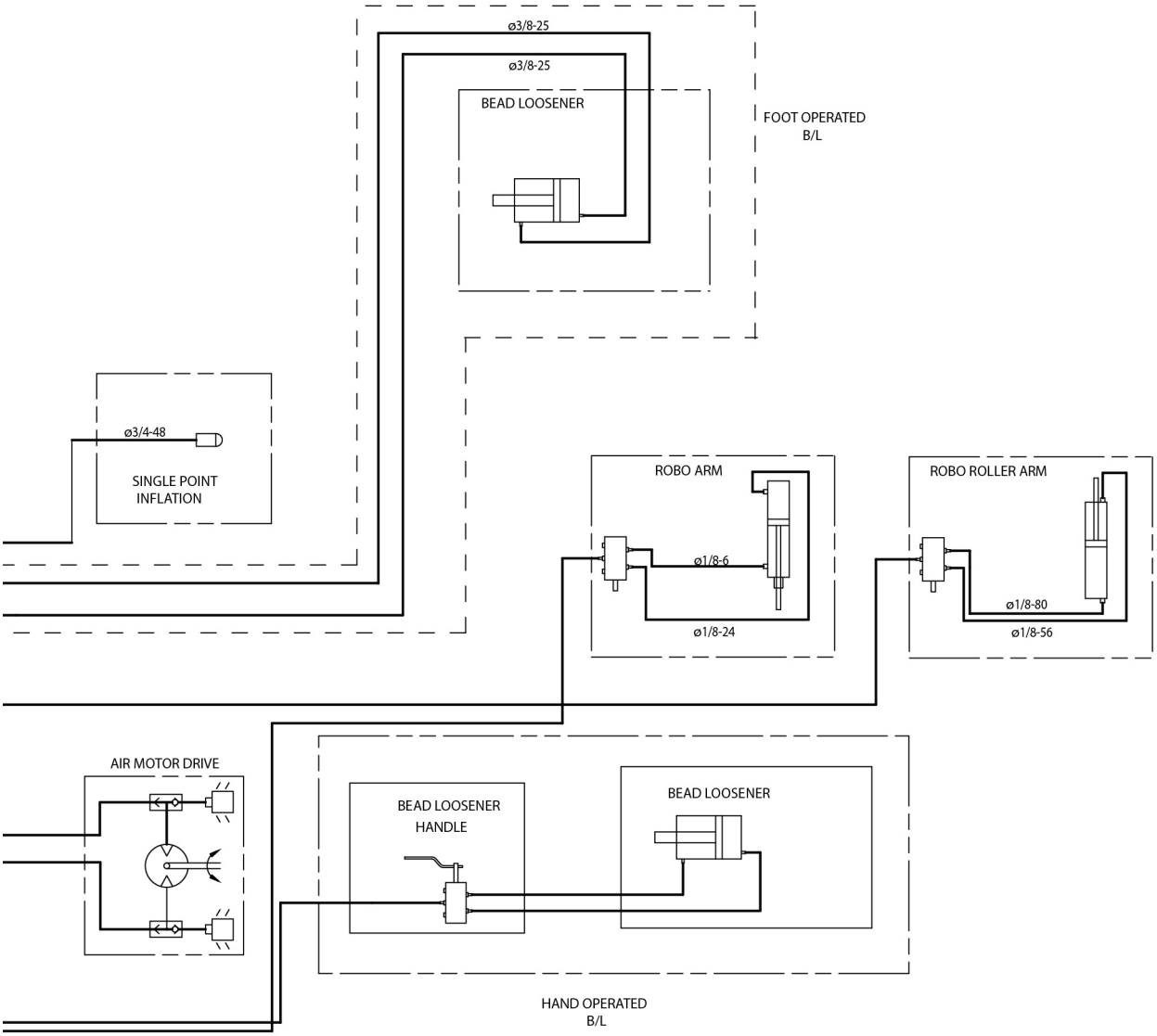

Note: All possible tire changer options are displayed. Your tire changer will include the options specified by the model number.

Electrical Schematic

Power Cords

Part No.	Description
85610349	115V
85610321	220V

Domestic & C.S.A.

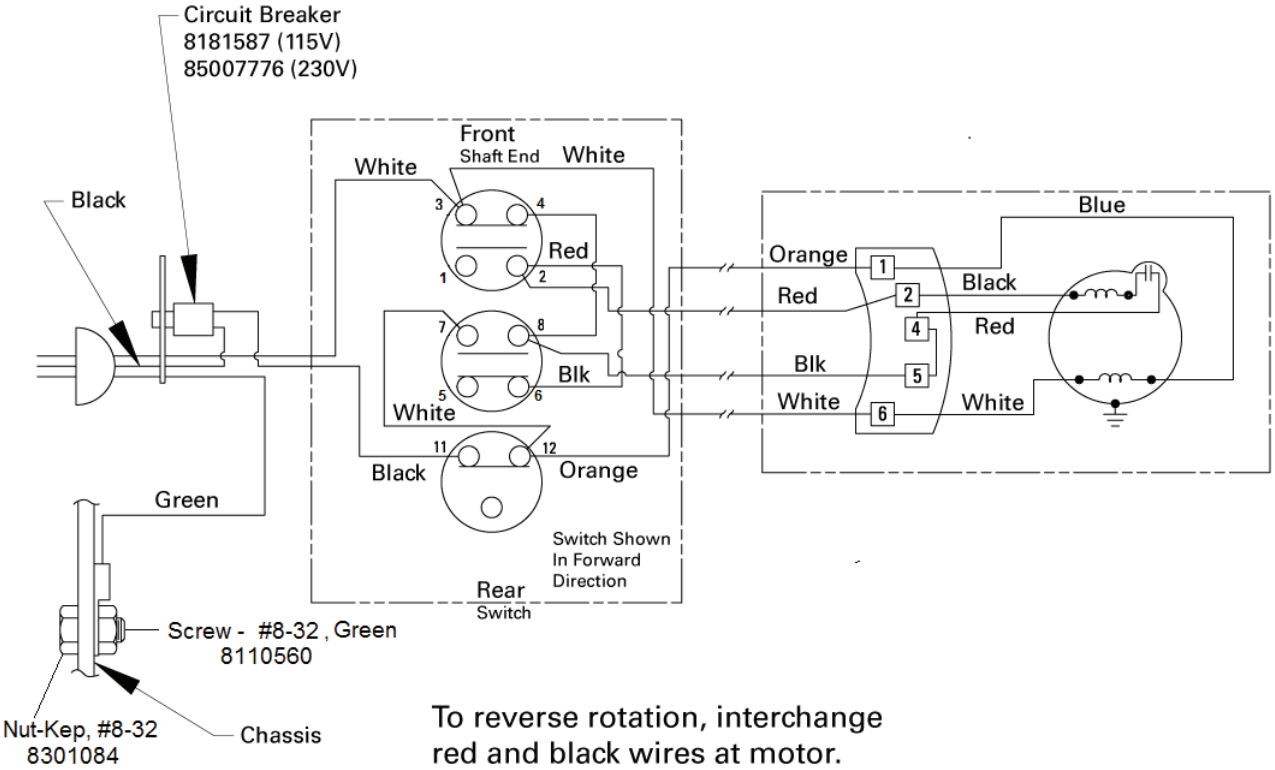

To reverse rotation, interchange red and black wires at motor.

Notes

Notes

Notes

Rim Clamp® Tire Changer

All-Air Unit Compressed Air Requirements

COATS® Rim Clamp® tire changers that are powered entirely by air (no electric motor) require a single compressed air power source. Refer to the table below for exact specifications.

Tire Changer Model	Compressor Size	Capable of
All	**5 HP**	**14-15 SCFM at 150 PSI**

Oil Injector Maintenance

The oil injector (on units so equipped) typically require annual service. The oil level in the oil reservoir tank should be checked regularly.

1. Add oil to the oil reservoir tank if the fluid level in the tank is at the "add" mark. Remove cap from the oil reservoir tank and add Chevron Regal® R & O 32 oil to the "full" mark. Replace the cap and clean up any spilled oil.

Important: If the hose between the reservoir and injector is ever empty of oil, an air lock will form. After filling the reservoir tank, the line must be bled of air at the injector connection as follows:

a. Remove the side panel and locate the oil injector.

b. Loosen the bleeder screw until oil drips from the screw (or press bleeder button, if so equipped).

c. Retighten bleeder screw (if required).

d. Cycle the clamp valve a few times checking for oil and air leaks.

e. Test the machine for full function before returning the machine to operation.

Air Gauge Check and Recalibration

1. Inflate a standard 15" passenger car tire/wheel assembly to 32 PSI. Use a high quality stick-type pressure gauge to verify the pressure. Attach the tire changer's inflation hose to the valve stem and check the pressure reading on the air gauge. If it does not read 32 PSI, recalibrate the gauge.

2. Remove the screw-on lens. Loosen the 2 screws on the face of the gauge. Loosen them just enough so that the gauge face moves. Do not remove the screws.

3. Rotate the gauge face until the 32 PSI mark is aligned with the gauge needle. Tighten the 2 screws and replace the lens.

Danger, Warning, Caution, and Instructional Decals

Always make the cleaning of these important decals a part of your regular maintenance routine. If they are damaged or illegible, replace them immediately. Your safety, and the safety of others is involved!

Regal® is a trademark of Chevron Products Company

 © Copyright 2015 Hennessy Industries and COATS® All Rights Reserved. Printed in USA