XR 1750 Series Wheel Balancer
(1750, 1750-2D, 1750-3D, 1750-3DI)

Parts Identification

READ these instructions before placing unit in service KEEP these and other materials delivered with the unit in a binder near the machine for ease of reference by supervisors and operators.

HENNESSY INDUSTRIES, INC.
1601 J. P. Hennessy Drive, LaVergne, TN USA 37086-3565 615/641-7533 800/688-6359 www.ammcoats.com
HENNESSY INDUSTRIES INC. Manufacturer of AMMCO®, COATS® and BADA® Automotive Service Equipment and Tools.
Manual Part No.: 8113763 19
Revision: 07/09

Parts Identification

The following pages include parts breakdowns with exploded view illustrations to help with ordering replacement or spare kits. Assemblies are noted where it is recommended that individual parts not be ordered separately. These parts are available only as assemblies because some parts are staked, pinned, or press fitted, then drilled, machined, or bored. Close tolerances must be maintained in assembly. Every effort is made to supply accurate exploded views, however, due to interim changes in manufacturing operations, some units may not be exactly as illustrated.

Parts Identification

Item	Description
P/N 80180104 Hood Switch Kit	
31	Hood Switch Assembly
41	Hood Switch Washer
P/N 8114452 Motor & Mtg Hardware Kit, 115V	
P/N 80180120 Motor & Mtg Hardware Kit, 230V	
100	Spindle Drive Motor w/Pulley, 115V
	Spindle Drive Motor w/Pulley, 230V
101	Screw Plate
102	M6 Flat Washer
103	M6 Lock Washer
104	6M Hex Nut
P/N 80180108 Stub Shaft Kit	
*	Serrated M10 Washer
116	Threaded Shaft 40MM
117	SHC M10 x 160 Screw, Gr. 8.8
P/N 80180109 Piezo Kit	
106	Piezo Static Assembly
107	Piezo Dynamic Assembly
108	Dynamic Piezo Rod
109	Static Piezo Rod
110	Jam M10-1.5 Hex Nut
111	Small 10M Washer
112	Large M10 Flat Washer
113	Spring Piezo Washer
P/N 80180110 Brake Pad Kit	
*	Brake Pad
*	Brake Pad Screw
*	Brake Pad Washer
P/N 80180111 Brake Kit Complete	
133	Hair Pin Clip
134	Hair Pin Cotter
135	M8-1.25 Hex Hylok
136	Brake Spring
137	Brake Tie Rod
138	0.360 ID x 0.932 OD x 0.080 Flat Washer
139	M8 Flat Washer

Item	Description
P/N 8114221 Distance Rod Kit	
23	Adhesive Back Cable Tie
88	Gauge Rod
124	Slide Bracket
145	M6 x 6 Set Screw
P/N 80180114 Pulley Kit	
87	Distance Pot. Pulley
92	Distance Gauge String - 22″
93	Distance Gauge Spring
94	Collar Assembly
95	Return Pulley
96	Self Locking Ring
144	Distance Gauge String - 13″

**** Not Shown***

Parts Identification

Item	Part	Description
1	902189	1/4-20 X .500 HHCS
2	903214	Flat Washer, Std, 1/2" S.A.E.
3	904379	Pl. Stl. Washer
4	925271	1/2-13 X 2.00 FHSCS
5	7110208	Rub Button Carriage
6	8000745	1/4 Flat Washer
7	8106301	HWH Self Tapping Screw
8	8107635	5/16 Std. Flat
9	8109802	1/4-20 NC X 2.00 HHCS
10	8109839	Sand Bag
11	8109944	Hood Bar Washer
12	8109945	Washer 1 1/2" Retainer
*13	8110241	Weight Position Decal
14	8110560	8/32 x .75" Lg. Screw (Green)
15	8110817	Control Pod Knob
16	8111021	Caliper Storage Hook
18	8111542	8-32 x 5/8 Lg. Screw
*19	8111840	Warning Decal
*21	8111885	Plug Grounding Decal
22	8112120	Worm Hose Clamp
23	8112351	Adhesive Back Cable Tie
24	8112724	Hood Bar W/C
25	8113251	Assess Holes Cover
26	8113256	Wire Tray
27	8113264	Sonar Target Rod
28	8113267	Channel Monitor Tilt
29	8113296	Hood Pivot Sleeve
30	8113297	Width Sonar Bracket
33	8113358	Target W/C, Sonar Cal.
34	8113360	Angle Sonar Target Rod
*35	8113401	Sonar Target Decal
36	8113418	1/2-13 X 1.00 SHCS
37	8113473	Tape-A-Weight™
38	8113531	Weight Tray Assembly
39	8113532	Belt Tightening Plate Assem.
40	8113534	Glide Plate
42	8113536	Bottom Cover, Tower
43	8113537	Bottom Cover, Hood Bracket
*44	8113541	Faceplate Arrow Decal
*45	8113927	Caution/Patent Decal
46	8113557	Switch Panel Assembly, 115V
	8113747	Switch Panel Assembly, 230V
*47	8113567	Piezo Assy. Instr. Decal
*48	8113568	On/Off Decal
*49	8113569	Ground Location Decal
50	8113570	Warning Decal
52	8113620	Wheel Hood Guard
*53	8113666	Caution 115V Decal
	8113754	Caution 230V Decal
*56	8113726	Caution Fuse Decal, 115V
	8113755	Caution Fuse Decal, 230V
57	8113736	Tree Asy w/Sleeves & Bumpers
58	8113232	Chassis - Weld Comp.
63	8113810	Power Cord Assembly
64	80180134	PCB Main CPU
65	85009152	Monitor
66	8113818	Monitor Tower Front
67	8120325	5/16 X 1.00 SWH Screw
68	8143044	3/8-16 Nut Tinnerman
69	8143956	Circular Push-On Retaining Ring
70	8181369	1/4-20 UNC Hex Nut
71	8181984	1/4-20 X 1.00 HHCS
72	8182149	SHC 5/16-18 x 3/4 Screw
73	8183638	Stand Off Spacer
74	8301019	50 Lbs. Ballast
75	8301032	3/8" x 1.00 Flat Washer
76	8301084	#8-32 Kep Nut
77	8301121	Plain Washer, 1/2" x 1-3/8"
78	8301122	1/2-13 Hex Nylock Nut
79	8301142	1/4" Spring Lock Washer
80	8307014	Flanged Nylon Bearing
81	8308023	Compression Spring, Dim. Arm
82	8308062	Hood Spring, Extension
83	8308535	Stop Bushing
84	8309008	Hood Molding Stop
85	8113925	Rotating Arm
86	8114366	Gauge Bracket Comp.
87	80180017	Distance Gauge Pulley
88	8114361	Gauge Rod
89	80180019	Distance Gauge String Bracket
90	80180020	String Bracket Screw
91	80180021	Lock Washer, String Bracket
92	8114363	Distance Gauge String - 22"
93	80180023	Distance Gauge Spring
94	8114402	Collar & Screw Assembly
95	8114365	Return Pulley
96	8114372	Self-locking Ring
97	8114137	Diameter Potentiometer
98	8114137	Distance Potentiometer
105	85606464	Encoder Assembly
106	80180050	Piezo Static Assembly
107	80180051	Piezo Dynamic Assembly
113	80180057	Spring Washer
114	80180059	Balancer Spindle
115	80180068	Drive Belt

**** Not Shown***

Item	Part	Description
118	80180079	Touch Panel Assembly
119	8114465	Power Panel Assembly, 115V
	80180117	Power Panel Assembly, 230V
120	8114460	Capacitor 60MF/400V, US
	80180119	Capacitor 14MF/400V, Austrialian
121	80180090	Width Sensor w/Cable
123	85606469	No-Mar Ring
124	8114371	Slide Bracket
125	8114360	6M x 16M Screw
126	85606467	Hub Nut
127	85606470	Hub Cup
128	85606473	Braking Transformer, 115V
	80180121	Braking Transformer, 230V
129	8114450	Control Transformer, 115V
	80180122	Control Transformer, 230V
130	80180085	Sonar Power PCB
*131	80180038	Main Switch
*132	80180039	Strain Relief, Power Cable
140	80180001	Brake Lever Complete
141	8113348	Brake Pedal
142	8180103	Standard Clevis Pin, 3"
143	8107407	Hitch Pin Retainer
144	8114364	Distance Gauge String - 13″
145	8114408	M6 X 6 Set Screw
146	8114446	24mm ø Pulley
*	85606465	Encoder Cable
*	85606466	Encoder Spring
*	8113558	Circuit Breaker
*	8410419	Doyfe Air Chuck
*	8113370	2-way Valve Assy. w/Fittings
*	8105822	9/16 ID Hose Clamp
*	8101428	Worm Hose Clamp
*	8000378	Straight Fitting
*	8113417	1/4" ID x 120" Blk Rubber Hose
*	8113416	1/4" ID x 8" Blk Rubber Hose
*	8000461	1/4" ID x 12" Black Hose
*	8120264	1/4" ID x 44" Black Hose
*	8183502	Bleed Valve Manifold
*	8113862	Monitor Tower Front
*	8107983	Plastic Fastener
*	8182047	3-way Push Button Valve
*	8005696	0.688 x 1.75 x 0.125 Thk. Washer

**** Not Shown***

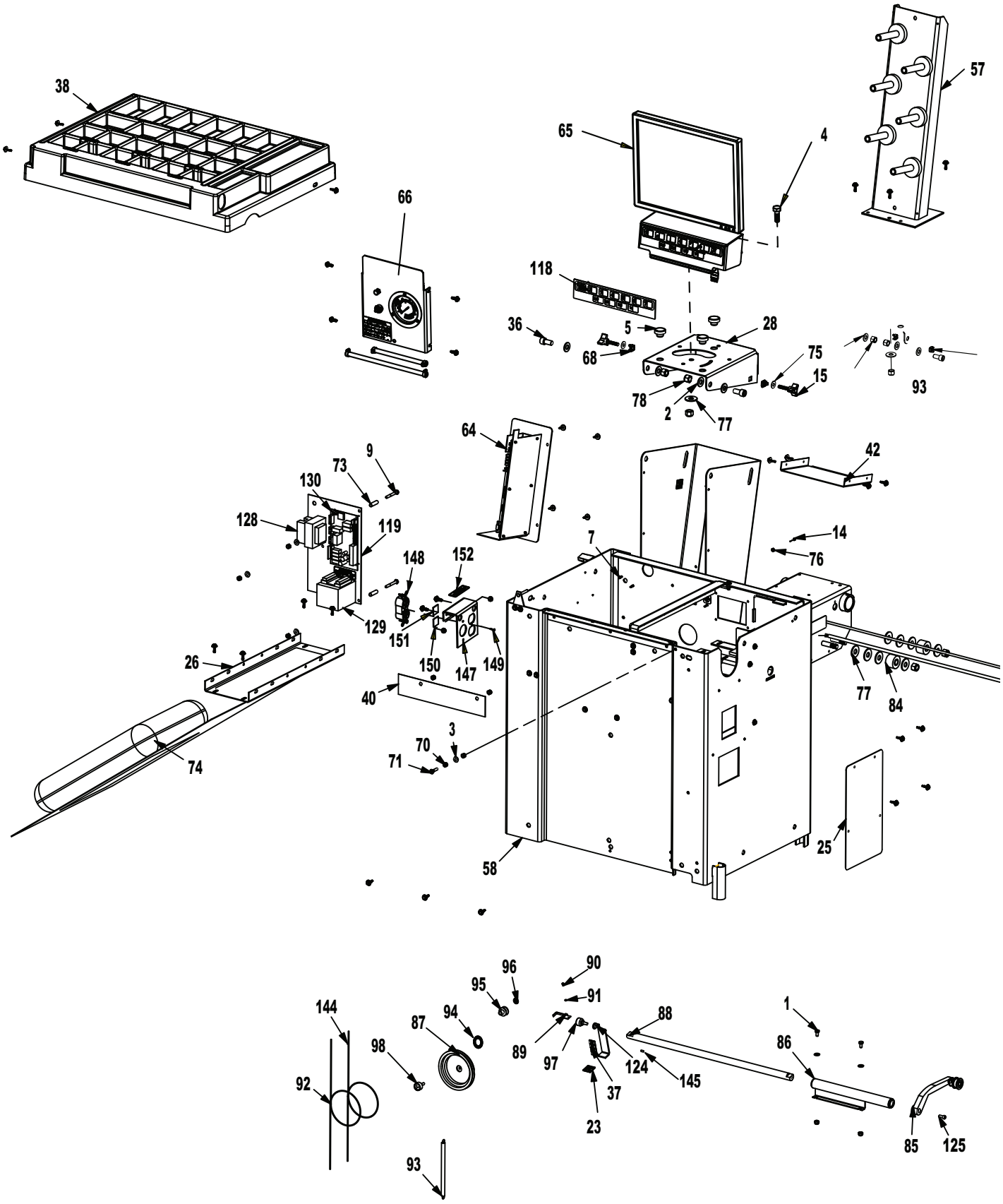
38
57
65
4
66
118
36
5
28
68
75
15
93
78
2
77
64
9
73
130
42
128
119
14
7
76
148
152
129
151
150
147
149
26
40
77
84
3
70
71
74
25
58
96
90
95
91
144
94
87
88
1
98
89
97
124
145
86
92
37
23
85
125
93

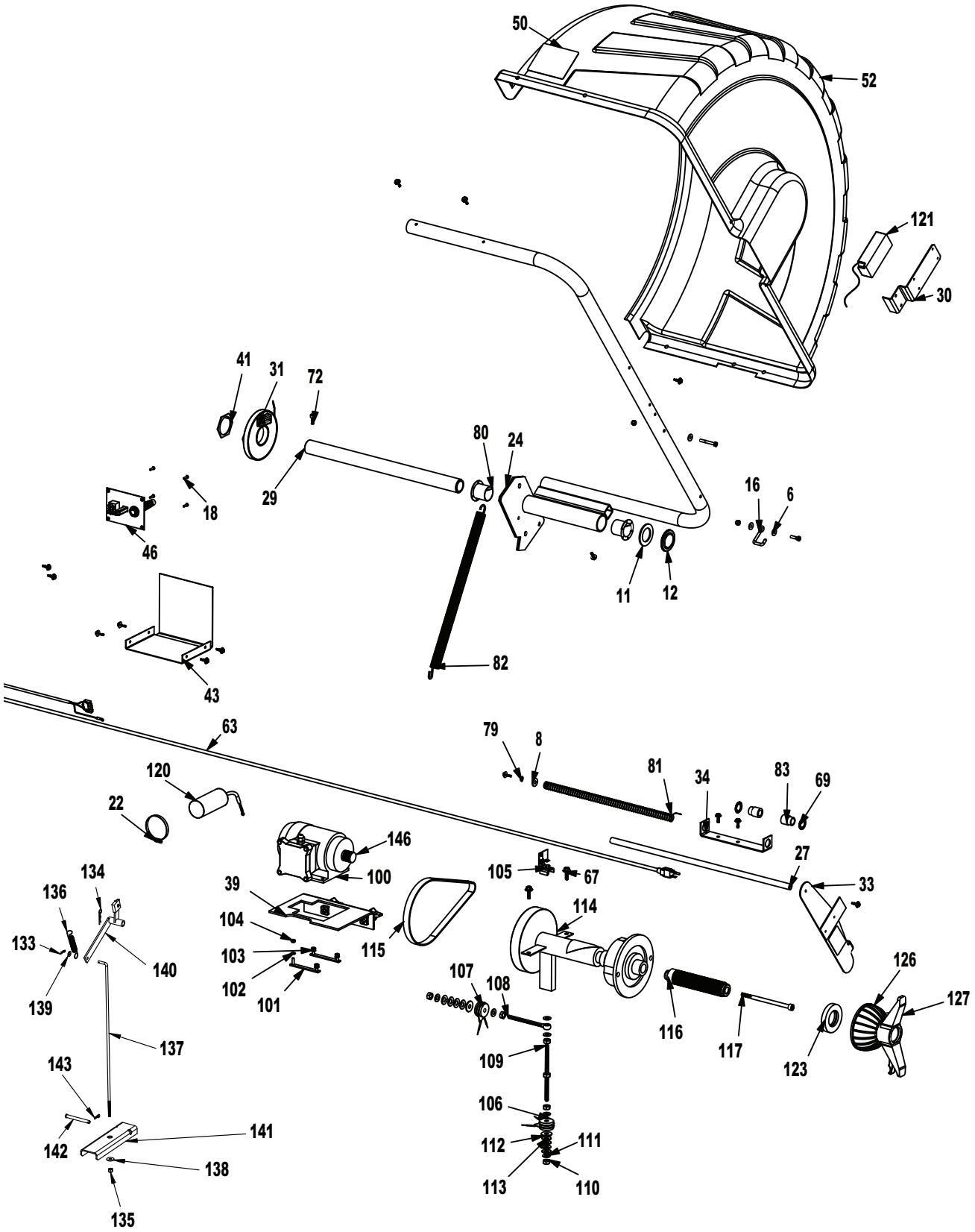
50
52
121
30
41
31
72
80
24
29
18
46
16
6
11
12
82
43
63
79
8
81
34
83
69
120
22
146
100
105
67
27
33
134
136
39
104
114
133
140
103
115
102
101
107
108
126
127
139
116
117
123
137
109
143
106
141
142
112
111
138
113
110
135

8113763 19 07/09 © Copyright 2003 Hennessy Industries and COATS® All Rights Reserved Printed in USA