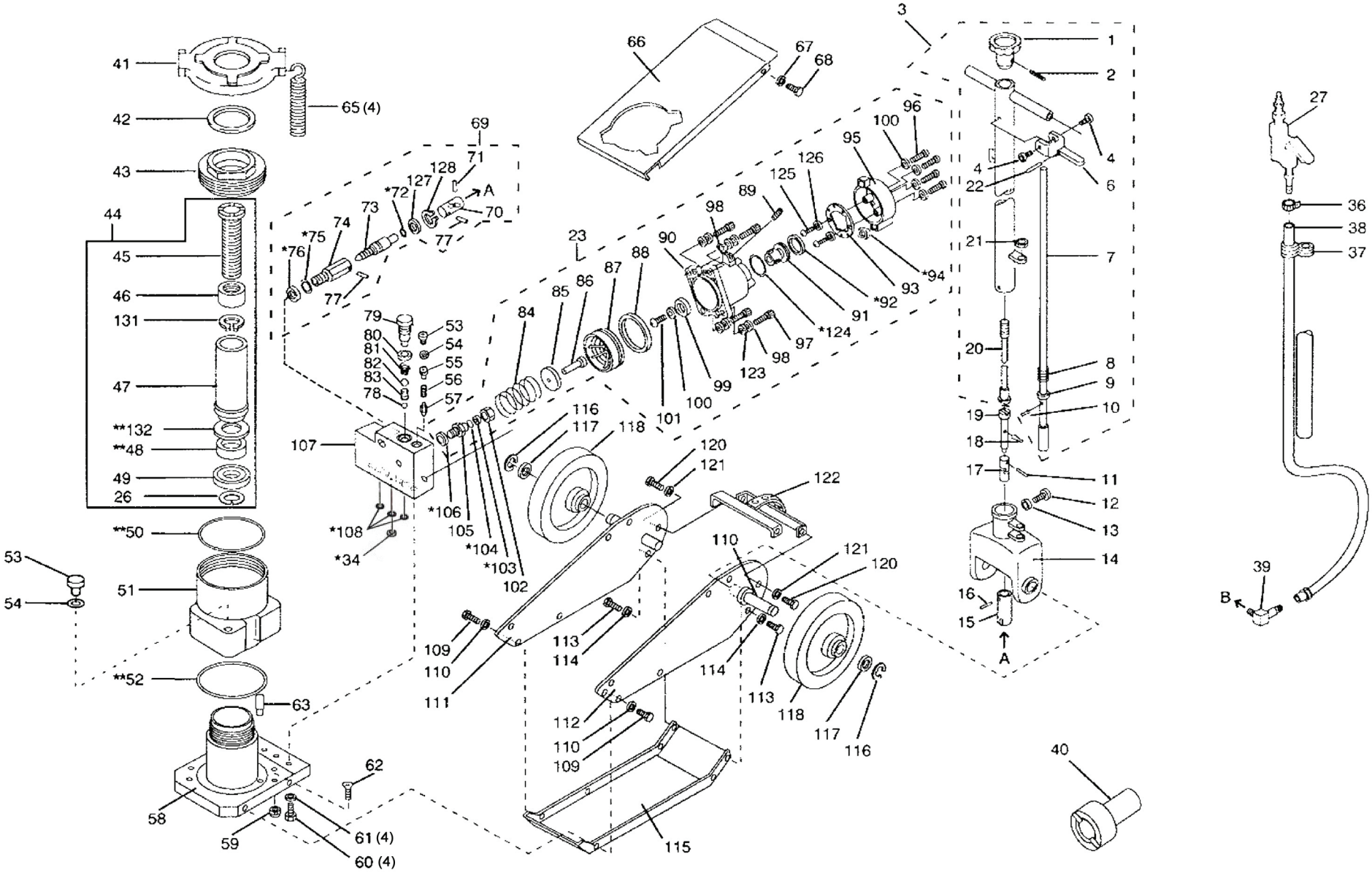

REPLACEMENT PARTS	MODEL NO.	CAPACITY	DESCRIPTION
	72200D	22 TON	AIR / HYDRAULIC AXLE JACK

norco®

INDEX NO.	DESCRIPTION	PART NO.	REQ'D NO.
1	Knob	222079	1
2	Pin, Spring	222082	1
3	Handle Assembly	222083	1
4	Bolt	222084	2
5			
6	Lever, Lock	222087	1
7	Stopper	222089	1
8	Spring	222091	1
9	Washer	222092	1
10	Pin, Cotter	7037	1
11	Pin, Spring	222097	1
12	Bolt	222098	1
13	Washer, Spring	222099	1
14	Fork, Handle	222101	1
15	Rod, Connecting	222102	1
16	Pin, Spring	222103	1
17	Joint, Universal	222096	1
18	Pin, Cotter	7038	1
19	Rod, Connecting	222094	1
20	Rod, Connecting	222093	1
21	Washer	222088	1
22	Pin, Spring	222086	1
23	Air Motor Assembly	222160	1
24			
25			
26	"C" Clip	222168	1
27	Complete Air Valve	222105	1
28			
29			
30			
31			
32			
33			
*34	Backup O-ring	222175	1
35	Connector, Hose	222113	1
36	Band, Hose	222114	2
37	Spring	222116	1
38	Hose, Air	222117	1
39	Elbow, Pump	222122	1
40	Saddle	222328	1
41	Hanger, Spring	222007	1
42	Seal, Oil	8039	1
43	Nut	222008	1
44	Rod Assembly, Piston	222000	1
45	Screw, Extension	222001	1

INDEX NO.	DESCRIPTION	PART NO.	REQ'D NO.
46	Bushing	222003	1
47	Rod, Piston	222166	1
**48	Packing "U" Cup	8038	1
49	Seat, Packing	222006	1
**50	O-Ring	12082	1
51	Tank, Oil	222009	1
**52	O-Ring	12083	1
53	Bolt	222012	2
**54	Packing	222013	2
55	Seat, Spring	222014	2
56	Spring	222016	2
57	Valve, Safety	222017	1
58	Cylinder	222155	1
59	Nut	222019	1
60	Bolt	222021	4
61	Washer, Spring	222022	4
62	Screw, Machine	222023	4
63	Strainer, Oil	222011	1
64			
65	Spring	4015	4
66	Cover, Upper	222059	1
67	Lock Washer	222061	4
68	Screw, Machine	222062	4
69	Valve Assembly, Relief	222025	1
70	Joint, Universal	222026	1
71	Pin, Spring	222028	1
*72	O-Ring	12084	1
73	Valve	222029	1
74	Guide	222031	1
*75	O-Ring	12085	1
*76	Packing	8040	1
77	Pin, Spring	222027	2
78	Ball, Steel	9013	1
79	Bolt	222033	1
80	Packing	8041	1
81	Spring	222034	1
82	Ball, Steel	9012	1
83	Separator	222036	1
84	Spring	222056	1
85	Seat, Spring	222054	1
86	Plunger	222053	1
87	Piston, Air	222133	1
*88	U-Cup Seal	222134	1
89	Plug Guide	222147	1
90	Body, Air Pump	222138	1

INDEX NO.	DESCRIPTION	PART NO.	REQ'D NO.
91	Valve, Servo	222148	1
*92	U-Cup Seal	222149	1
93	Muffler Insert	222154	1
*94	Square Gasket	222153	1
95	Cover, Muffler	222156	1
96	Screw	222157	4
97	Screw	222143	1
98	Lock Washer	222142	1
99	Guide, Packing	222137	1
100	Washer	222136	1
101	Screw	222146	1
102	Nut	222057	1
*103	Ring, Backup	12089	1
*104	O-Ring	12090	1
105	Cylinder	222058	1
*106	Packing	8042	1
107	Box, Oil	222135	1
*108	O-Ring	12086	3
109	Bolt	222066	1
110	Washer, Spring	222064	1
111	Frame, (right hand)	222077	1
112	Frame, (left hand)	222078	1
113	Bolt	222076	2
114	Washer, Spring	222074	2
115	Cover, Lower	222063	1
116	Ring, Snap, Wheel	12091	2
117	Washer	222067	2
118	Wheel	222068	2
119			
120	Bolt	222069	2
121	Washer, Spring	222071	2
122	Bracket, Handle Fork	222072	1
123	Flat Washer	222141	4
*124	O-Ring	222144	1
125	Screw	222151	2
126	Lock Washer	222152	2
127	Washer	222159	1
128	Snap Ring Release Valve	222161	1
129			
130	Snap Ring, Ext, Screw	222163	1
131	Snap Ring, Ram	222164	1
**132	Backup Ring	222167	1

** Designates parts in kit #222170 *hydraulic only*

* Designates parts in kit #222165 *air only*

**/* Designates parts in complete repair kit #222300

REPLACEMENT PARTS	MODEL NO.	CAPACITY	DESCRIPTION
	72200D	22 TON	AIR / HYDRAULIC AXLE JACK

norco®